TETON COUNTY

3000W BADGER CREEK PRECAST BRIDGE

BID REQUIREMENTS

DATE: July 29, 2013

PREPARED BY: TETON COUNTY ENGINEER

ADVERTISEMENT FOR BIDS

Precast Bridge Materials for the Badger Creek Bridge at N3000W

The County of Teton in the State of Idaho ("County") is soliciting responses to this request for bids (RFB) for the supply of precast bridge materials. Proposals will be accepted at the Teton County Engineer's Office until 10:00 AM, local time, August 16, 2013. The Sealed Bids will be opened publicly at 10:30 am, August, 2013 at the Engineer's Office in the Teton County Courthouse.

The Bid Requirements will be available August 1, 2013, at the Teton County Recorder's Office at 150 Courthouse Drive, Driggs, Idaho, 208-354-0245. Electronic copies of the Bid Requirements will be posted on the County Website: www.tetoncountyidaho.gov

The Contractor shall comply with all fair labor practices and must meet the requirements of State statutes.

In determining the lowest responsive bid, the County will consider all acceptable bids on a basis consistent with the bid package. The County will also consider whether the bidder is a responsible bidder.

Before a contract will be awarded for work contemplated herein, the County will conduct such investigation as is necessary to determine the performance record and ability of the apparent low bidder to perform the size and type of work specified under this Contract. Upon request, the Bidder shall submit such information as deemed necessary by the County to evaluate the Bidder's qualifications.

No Bid may be withdrawn after the scheduled time for the public opening of the bids specified above.

The County reserves the right to reject any or all Bids received, to waive informalities, to postpone the award of the contract for a period of not to exceed sixty (60) days, and to accept the lowest responsive and responsible Bid which is in the best interest of Teton County.

3000W at BADGER CREEK PRECAST BRIDGE CONSTRUCTION CONTRACT

THIS CONSTRUCTION AGREEMENT ("Agreement") is entered into this _____ day of

_____, 20____, by and between: Teton County Idaho ("County") and

_____ ("Contractor").

WITNESSETH

WHEREAS, Teton County needs the precast bridge to be installed near Tetonia, Idaho in keeping with the drawings and specifications or work write-up cumulatively called the "Plans" prepared by the County, and provided by the County attached to and made a part of this Agreement; and

WHEREAS, Contractor desires to supply the product as described in the Plans;

NOW, THEREFORE in consideration of the sum of money described below and for other good and valuable consideration, the parties agree as follows:

1. CONSIDERATION.

County hereby agrees to pay the Contractor the sum of
_____
_____Dollars ($_____)
for the performance of this Agreement. A lump sum payment will be issued to the Contractor at the completion of the project for the above amount.

2. FAMILIARITY WITH SITE.

The Contractor has visited the property and is familiar with the local conditions under which the supplied items will be installed.

3. LABOR, MATERIALS AND PERMITS.

The Contractor agrees to provide all of the material and labor required for the timely performance of duties detailed in the Plans and under the precast structure section of this contract including equipment, tools, water, heat, utilities and services necessary for the proper completion of the work. Contractor agrees to obtain and pay for all permits, licenses and inspections necessary for completion of the Plans. Unless otherwise specified, all materials shall be new and of good quality. In prosecution of the Plans, Contractor agrees to employ a sufficient number of workers skilled in their trades to suitably perform the work.

4. WARRANTY OF WORKMANSHIP.

All work will be of good quality, free from defects and faults, in accordance with the Plans and attached herewith, which have been approved by the County and Contractor and free from all liens and claims. All work not conforming to this requirement will be considered defective. Contractor agrees to re-execute

any work which does not conform to the Plans, warrants the work performed, and agrees to remedy any defects resulting from faulty materials or workmanship which shall become evident during a period of one (1) year after completion of the work and final payment under this Agreement. The provisions of this section apply to work performed by subcontractors as well as work performed by direct employees of the Contractor. Contractor agrees to provide a one-year written warranty to County. Contractor agrees to provide original manufacturers' warranties to County for all applicable materials, fixtures and appliances.

5. PRECAST STRUCTURE.

I) Description: This item shall consist of designing, furnishing and shipping a three-sided concrete bridge. All three sections shall have an overall bridge span of 43-ft with 8-ft 9-inch rise. The item shall include the precast structure, footings, stem walls (as required), head walls and wing walls. The structure shall be in reasonable close conformity with the lines and grades as shown on the plans and specifications.

II) Materials: Materials shall meet the requirements shown on the plans and specifications.

III) The contractor shall submit the completed design calculations, detail drawings, and shop drawings to the Engineer for review and approval. Fabrication shall not start until the Engineer approves the design and shop drawings. The calculations shall be prepared on 8 ½" x 11" sheets and stamped by an Engineer registered in the state of Idaho. Detail drawings and shop drawings shall be prepared in accordance with the following:

a) Plans and Working Drawings. Plans showing details of all structures, lines, grades, typical cross sections, location and design of all structures and a summary of items appearing on the proposal.

b) The Contractor will supplement the plans by such working drawings as are necessary to adequately control the work. Working drawings shall be submitted to the Engineer for review in advance of the start of the affected work to allow time for review by the Engineer and corrections by the Contractor without delaying the work. The drawings shall be to a scale on sheets measuring 11 in. x 17 in, or larger. Unless otherwise stated in the contract, the Engineer will require up to 14 calendar days from the date the submittals or re-submittals are received until they are returned to the Contractor.

c) This time will increase if the drawings submitted do not meet the contract requirements or contain sufficient details.

d) For structures, six sets of working drawings shall be furnished and shall include stress sheets, shop drawings, erection plans, bending diagrams for reinforcing steel, or any other supplementary plans or similar data required of the Contractor.

e) Working drawings shall be approved before beginning the work covered by these drawings. Such approval is only for general conformance with the information given in the contract documents and does not relieve the Contractor of responsibility for correctness of the details and dimensions, nor does it waive any requirements of the specifications.

f) The contract price shall include the cost of furnishing all working drawings.

IV) All drawings shall be stamped by an engineer registered in the State of Idaho. Mylars and an electronic copy (PDF) of the approved detail drawings and shop drawings shall be submitted to the Engineer.

V) The contractor may use a proprietary precast system that meets all the specifications and requirements set forth in this agreement.

VI) The wing walls shall be designed as show on the preliminary plans

VII) A soils report is included with this bid set.

VIII) Use a minimum 28-day compressive strength concrete and a minimum steel yield strength as shown on the Plans.

IX) Use the design loads as shown on the Plans.

X) Joints – Produce the precast concrete segments with approved grouted shear keys and welded shear connection details, or an approved equal. The design and form of the ends of the segments shall be such that when they are laid together, they make a continuous line of segments with a smooth interior, free of appreciable irregularities in the flow line, all compatible with the permissible variations given below. The joint width shall not exceed ¾".

XI) Storing and Transporting: Do not ship precast concrete segments until concrete cylinder tests manufactured of the same concrete and cured under the same conditions as the members indicate that the concrete in each segment has attained the minimum required 28-day strength and is as least 14 days old.

a) Store and transport precast segments in the upright position with the points of support and directions of the reactions, with respect to the segment, approximately the same as when the member is in its final position. Prevent cracking or damage during storage, hoisting, and handling of the precast segments. Replace segments damaged by improper storage or handling.

XII) Footing Construction: The footings shall be precast concrete footings as required. The dimensions shall be as designed by the Contractor.

XIII) On-Site Support for Installation of Proprietary Systems:

a) Provide for a company field representative from the selected precast company to be present at the start of bridge construction. They shall also be available as needed during the erection of the proprietary system to provide instructions and recommendations, and to assist the installer and the Engineer.

XIV) Basis of payment: Payment for accepted work will be made in a lump sum amount for the bridge materials. The design and manufacturer's representative costs shall be included in the lump sum amount.

6. COMMENCEMENT AND COMPLETION OF WORK.

The Contractor shall commence construction within 30 days of issuance of this contract from the County. The Contractor agrees that the work shall be completed on or before October 14, 2013. Failure to complete the project within 60 days shall be deemed a material breach of this agreement.

7. CONSTRUCTION DELAYS.

In the event the Contractor is delayed in the construction work by acts of God, fire, flood or any other unavoidable casualties; or by labor strikes, or by neglect of the County; the time for completion of the work shall be extended for the same period as the delay caused by any of the foregoing reasons.

8. INSPECTION OF WORK.

The Contractor will permit and facilitate inspection of the work by Federal, State, County and City and its agents and public authorities at all reasonable times. A final inspection will be conducted by the County at the time of delivery at the delivery location. This final inspection will be conducted prior to final payment. The delivery location is within ½ mile of the current bridge location to be agreed upon by the County and the Contractor. The default location is the current bridge location on Cemetery Road.

9. CHANGES IN THE WORK.

All changes and deviations in the construction work must be in writing and approved by the County, the contract sum being increased or decreased accordingly by the Contractor. Any claims for increases in the cost of the work must be presented by the Contractor to the County in writing, and written approval of the

County must be obtained by the Contractor before proceeding with the ordered change or revision. No change order will be approved unless its sole purpose is to necessitate conformance of the project with applicable codes.

10. INSURANCE.

The Contractor will purchase and maintain adequate workers' compensation insurance and liability insurance and will provide copies of the insurance policies to the County if required by the County before performance of this agreement. To the fullest extent permitted by law, Contractor will indemnify and hold County harmless against any claims, damages, loss and expenses, arising out of or resulting from the construction work or Contractor's acts or neglect.

11. COUNTY'S RIGHT TO TERMINATE AGREEMENT.

Should the Contractor neglect to perform its duties under this Agreement properly, or fail to perform any provision of this Agreement, the County may, after seven (7) days' written notice to the Contractor and without prejudice to any other remedy the County may have, correct any deficiencies and deduct the associated cost from the payment due to the Contractor, or at County's option, may terminate this Agreement and take possession of all materials and appliances and finish the work for code compliance as the County sees fit. If the unpaid balance payable under this Agreement exceeds the expense of finishing the work, the excess will be paid to the Contractor, but if the expense exceeds the unpaid balance, the Contractor will refund the difference to the County.

12. PAYMENT.

Payments will be made as provided in this Agreement. The making and acceptance of the final payment will constitute a waiver of all claims by County, other than those arising from (a) unsettled liens or from faulty work appearing within 12 months of the completion of construction as provided for under Section 4 of this Agreement; (b) claims by the Contractor except any previously made and unsettled. Payments otherwise due may be withheld due to defective work which has not been remedied, liens filed, damage by the Contractor to others which have not been settled, or failure to make payments properly to subcontractors or for material or labor.

13. RECORD RETENTION.

For a period of not less than five (5) years after delivery of the final payment to Contractor, Contractor will maintain all files and records pertaining to its performance under this Agreement.

14. COMPLIANCE.

Contractor will comply with any and all applicable state, federal and local laws, ordinances, regulations and codes.

14. MISCELLANEOUS.

(a) There will be no assignment of the rights and obligations of the Contractor under this Agreement without the prior written approval of County.

(b) This Agreement is made under and is governed by the laws of the State of Idaho, unless otherwise superseded by federal law.

(c) The invalidity or unenforceability of a particular provision of this Agreement will not affect the other provisions of this Agreement, and this Agreement will be construed in all respects as if any invalid or unenforceable provisions were omitted.

(d) All claims and disputes between County and Contractor will be decided by arbitration held at the offices of County, or at another place as the arbitrators may mutually determine, in accordance with the Construction Industry Arbitration Rules of the American Arbitration Association then in effect.

IN WITNESS WHEREOF, the parties have executed this Agreement the day and year first above written.

_____	_____
County Commissioner	Contractor Company Name
	By: _____
	Title: _____

WOMACK & ASSOCIATES, INC.
P.O. Box 12650 • Jackson, WY 83002 • Office (307) 733-7209
Fax (307) 733-8005 • Cell (307) 690-4033

• Geotechnical Engineering • Geology

May 20, 2013

Jennifer Zung
Harmony Design Inc.
P.O. Box 369
Driggs, ID 83422

RE: **GEOTECHNICAL INVESTIGATION REPORT FOR THE BADGER CREEK BRIDGE, COUNTY ROAD W10,000N AND N3,000W, NEAR FELT, IDAHO**

Dear Jennifer:

We are pleased to present this geotechnical investigation report for the proposed replacement bridge over Badger Creek, located near the intersection of W10,000N and N3,000W, in Teton County, Idaho. Two copies are enclosed. The report describes site conditions and presents conclusions and recommendations.

If you have any questions about this report, or if we may provide other services to you, please contact us. As the project progresses, we will be available to answer questions for you.

Respectfully submitted,

WOMACK & ASSOCIATES, INC.

PROFESSIONAL ENGINEER
REGISTERED
11949
5-20-13
STATE OF IDAHO
WESLEY RAYMOND WOMACK

Ray Womack, P.E.,

Enclosure: Reports

GEOTECHNICAL INVESTIGATION REPORT
BADGER CREEK BRIDGE
TETON COUNTY, IDAHO

Prepared for:

Jennifer Zung
Harmony Design Inc.
P.O. Box 369
Driggs, ID 83422

Prepared by:

Womack & Associates, Inc.
P.O. Box 12650
Jackson, WY 83002

May 20, 2013

TABLE OF CONTENTS

1.0 INTRODUCTION 1

2.0 PROPOSED CONSTRUCTION 1

3.0 INVESTIGATION PROCEDURES 1

3.1 FIELD INVESTIGATION 1
3.2 LABORATORY ANALYSIS 1
3.3 REPORT PREPARATION 1

4.0 SITE CONDITIONS 4

4.1 GEOLOGY AND SOILS 4
4.2 GROUNDWATER 4
4.3 EARTHQUAKES AND GROUND SHAKING 5

5.0 ENGINEERING ANALYSIS AND RECOMMENDATIONS 5

5.1 LIQUEFACTION HAZARD 5
5.2 SETTLEMENT 5
5.3 FOUNDATIONS 7
5.4 BEARING CAPACITY FOR SHALLOW FOUNDATIONS 7
5.5 EARTHWORK 7
5.6 SOIL FRICTION 8
5.7 LATERAL PRESSURES 8
5.8 EXCAVATION AND CUT SLOPE STABILITY 9
5.9 DEWATERING DURING CONSTRUCTION 9
5.10 OBSERVATION DURING CONSTRUCTION 10

6.0 LIMITATIONS 10

7.0 REFERENCES 10

List of Figures

Figure 1 - Site Location and Geologic Map 2
Figure 2 - Test Pit Location Map 3
Figure 3 - Design Response Spectrum 6

List of Tables

Table 5-1: Compaction Parameters for Stony Fill 7
Table 5-2: Lateral Earth Pressure Parameters – Stony Materials 8

List of Appendices

Appendix A: Test pit Logs
Appendix B: Laboratory Data

1.0 INTRODUCTION

As authorized by Jennifer Zung of Harmony Design, Womack & Associates conducted a geotechnical site investigation for the proposed replacement bridge over Badger Creek, located near the intersection of W10,000N and N3,000W in Teton County, Idaho (Figure 1). The purposes were to investigate surface and subsurface soil conditions, observe groundwater conditions, evaluate soil engineering properties, and to provide recommendations for foundation construction.

2.0 PROPOSED CONSTRUCTION

According to project drawings (Figure 2), the existing Badger Creek Bridge will be removed and replaced with a new 43-foot long, arch bridge protected by riprap at the wing walls. The bridge site is located approximately 200 feet south of the intersection of county roads W10,000N and N3,000W, in Teton County, Idaho.

3.0 INVESTIGATION PROCEDURES

3.1 Field Investigation

On May 2, 2013, a representative of Womack & Associates conducted a field investigation at the site that consisted of preliminary site reconnaissance and digging and sampling of two exploratory test pits. The test pits were located on the west side of the road and were excavated outside of the proposed footing areas (Figure 2). Shallow groundwater and sloughing soils limited the depth of the test pits to approximately 5 feet below ground surface (bgs).

Soil types, consistencies, and stratigraphic thicknesses were observed and documented by an engineering geologist and detailed test pit logs are attached in Appendix A of this report. Note that site conditions are variable and actual soil conditions may differ from those represented in the test pit logs. Alluvial deposits often vary significantly over short distances.

3.2 Laboratory Analysis

Grain size analysis was performed on the fine-grained deposits for filter design and the results are attached in Appendix B and discussed in Section 4.1. Due to the stony texture of the alluvial deposits observed at depth, additional laboratory testing was not necessary.

3.3 Report Preparation

The report describes the geological site conditions and includes a site location map, test pit location map, and test pit logs. The report also provides foundation and site recommendations.

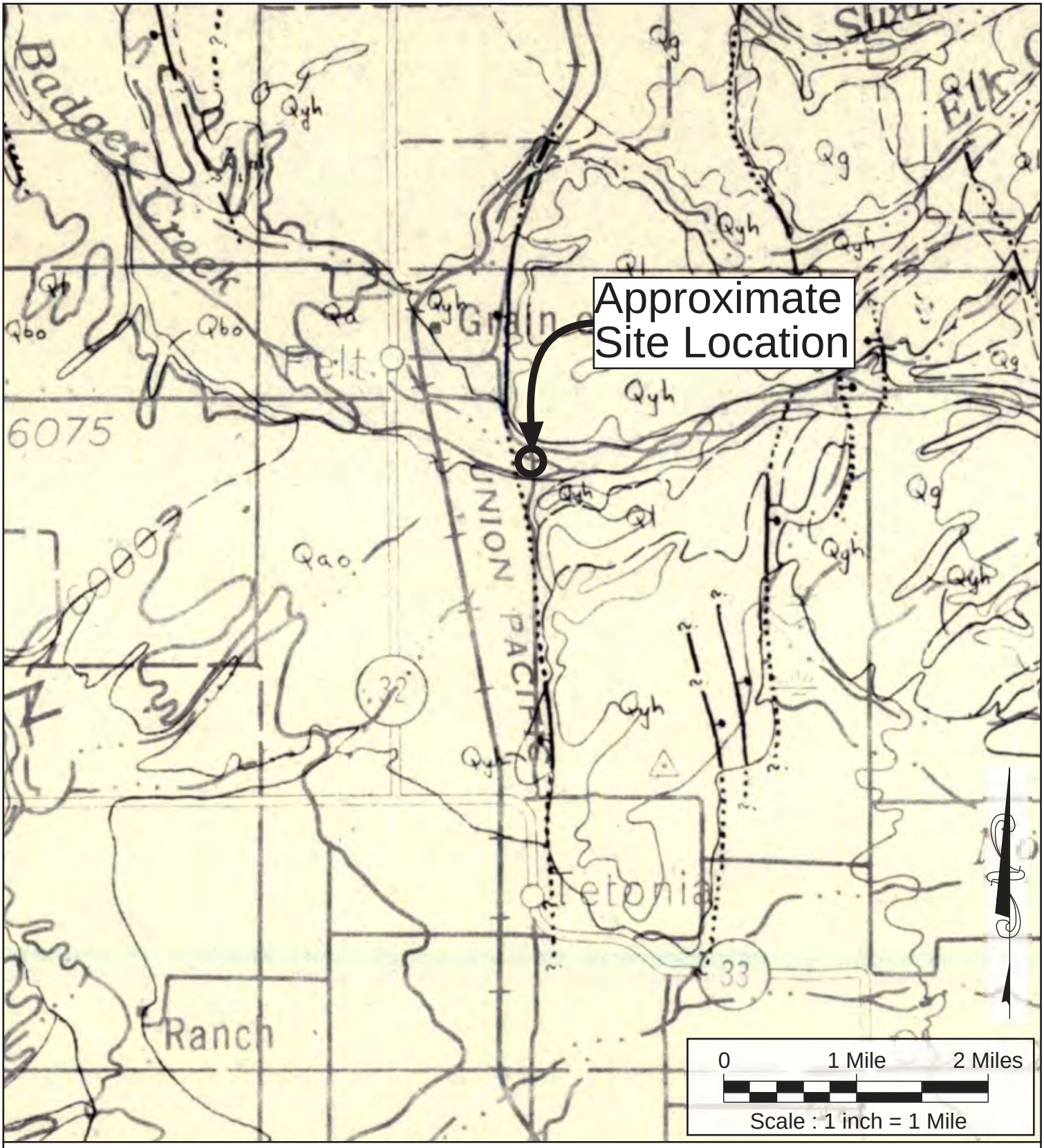

Qa - Alluvium
Qao - Older alluvium
Ql - Loess

Qg - Glacial till
Qyh - Huckleberry Ridge Tuff
Qbo - Older basalt

Adapted from: Prostka, H.J., Hackman, R.J., 1974, Preliminary geologic map of the NW 1/4 Driggs 1 by 2 quad., SE Idaho: U.S.G.S., OFR: OF-74-105, 1:125,000

Site Location and Geologic Map		FIGURE
Geotechnical Investigation Report N3000W Badger Creek Bridge Teton County, Idaho	**WOMACK & ASSOCIATES, INC.** \\server\data\clients\JH\Harmony\Badger Creek\Figure 1 - geo location map.pdf	1

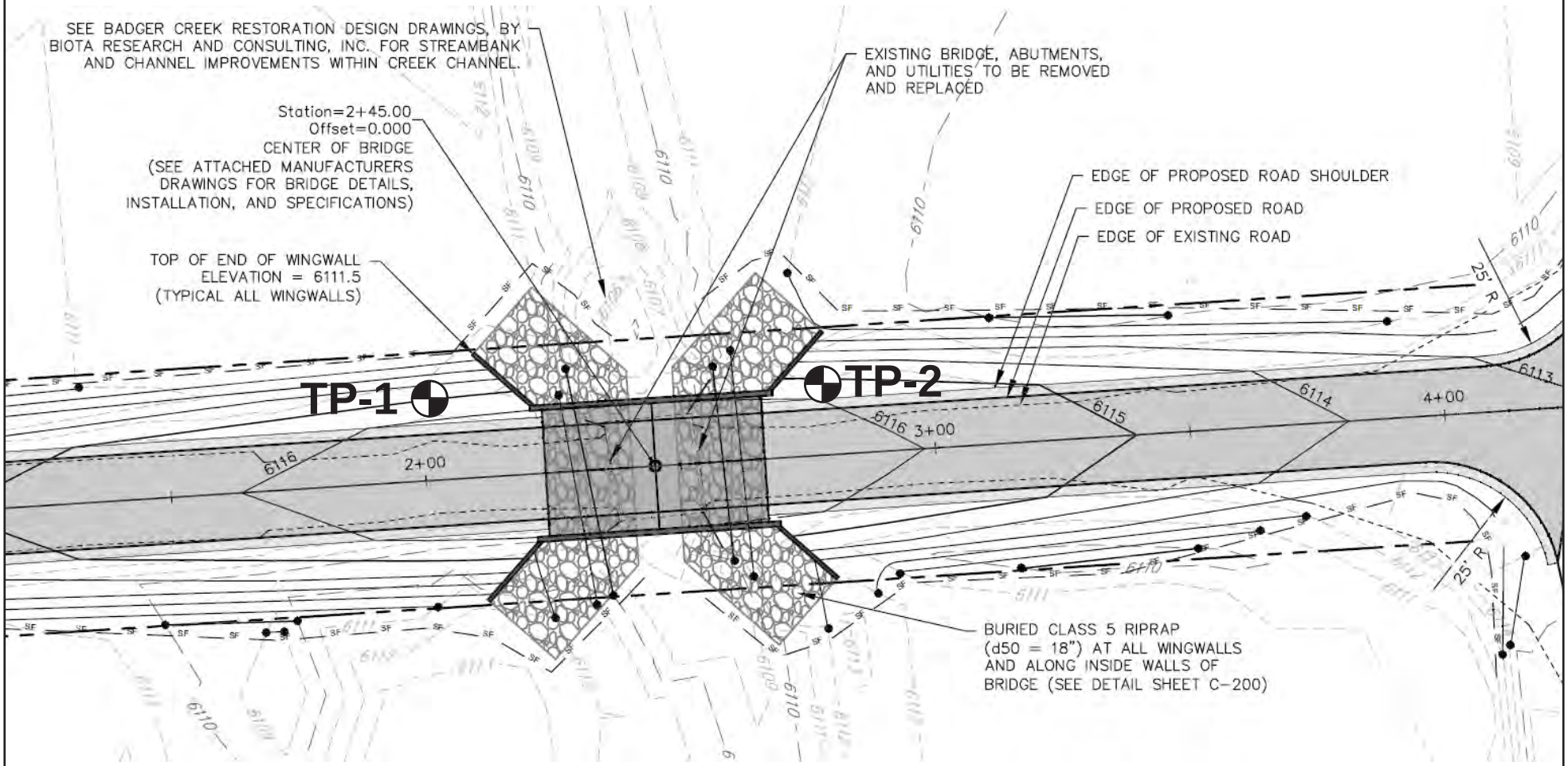

0 30 60

Scale : 1 inch = 30 feet

Test Pit Location Map
Geotechnical Investigation Report
N3000W Badger Creek Bridge
Teton County, Idaho

WOMACK & ASSOCIATES, INC.

FIGURE

2

\\server\clients\JH\Harmony\Bager Creek\Figure 2 Test Pit Location Map.pdf

4.0 SITE CONDITIONS

4.1 Geology and Soils

The property is found on the Preliminary Geologic Map of the NW ¼ Driggs 1 x 2 Quadrangle, compiled by Prostka and Hackman, 1974 (Figure 1). The map shows the location of surface deposits, bedrock units, and geologic structures (i.e., faults and folds). According to the map, the project site is covered by Quaternary alluvium (Qa) which consists of silt, sand, gravel, and cobbles. Soil types observed in the test pits are consistent with the mapped geology.

Several Quaternary aged (relatively young and potentially active) faults associated with the West Tetonia Fault System are mapped within a three mile radius of the project site (Mitchell and Bennett, 1979). Although these faults offset relatively young deposits, they are not considered highly active and there has been little seismic activity documented in historic times (1876-2000). Numerous other faults exist in the vicinity of the Teton Range (Case, 1997; Machette, et al, 2001; Pampeyan, et al, 1967; Stover, et al, 1991), including the Grand Valley fault system about 25 miles southwest of the project site in Swan Valley, the Snake River Fault located 30 miles to the southwest, and the Teton fault system on the east side of the Teton Range 20 miles to the east.

Test pits encountered 3 to 4 feet of fine-grained soils, consisting of moist to saturated, dark brown, loose to very loose silty clayey sand with gravel, overlying gravel and cobble alluvium. The stony alluvium is dense to very dense and was estimated to contain approximately 70% gravel and cobbles, 25% sand, and 5% fines. Rounded cobbles up to 6-inches in diameter were observed in the test pits and larger clasts were observed in Badger Creek.

A sample of the fine-grained alluvium was submitted to sieve analysis and test results indicated a relatively even mix of gravel (33.0%), sand (37.2%), and silt and clay (29.8%), with a moisture content of 22.9%. This classifies the material as silty, clayey sand with gravel (SC-SM), although the gravel content and the sand content are very close. The silt and clay fraction are expected to classify as silty low plastic clay, based on visual and textural observation.

4.2 Groundwater

Badger Creek was nearly full at the time of the field investigation and groundwater was observed to coincide with the creek level. The fine-grained alluvium in the test pits acted as a confining layer and groundwater came into the test pits as soon as the stony alluvium was reached. Groundwater is expected to be very shallow and dewatering may be necessary if construction occurs during the spring or summer. Badger Creek appears to be dry by the late summer, or earlier, and is fed directly from snowmelt in the Teton Range to the east.

4.3 Earthquakes and Ground Shaking

Teton Valley is located within the Intermountain Seismic Belt, a zone of seismicity that extends from southern Utah through eastern Idaho, western Montana, and western Wyoming (Smith and Arabasz, 1991). The Teton fault along the eastern margin of the Teton Range about 20 miles to the east, and the Grand Valley fault system in Swan Valley about 20 miles to the southwest of the project site are considered important structural elements of the Intermountain Seismic Belt.

Gilbert et al (1983) estimated that an earthquake of approximately magnitude M_s 6.5 might be anticipated along the Teton fault about once in 500 years. However, predicted recurrence intervals for maximum credible earthquakes have passed for most of the fault systems capable of generating magnitude 7.5 events in western Wyoming (Case, 1997), implying that the risk of major earthquakes is relatively high.

Site ground motion accelerations and design response spectra were derived in accordance with the general procedure defined in the International Building Code (IBC). The provisions of the 2012 IBC are intended to provide uniform levels of performance for structures, depending on their occupancy and use and the risk inherent to their failure.

The approach adopted in the 2012 IBC is intended to provide a uniform margin of safety against collapse at the *design* ground motion. The *design* earthquake ground motion is selected at a ground shaking level that is 2/3 of the *maximum considered earthquake* (MCE) ground motion. The Site Ground Motion and Design Response Spectrum for the 2012 IBC is presented in Figure 3.

5.0 ENGINEERING ANALYSIS AND RECOMMENDATIONS

5.1 Liquefaction Hazard

Loose, saturated sands, and in some cases, silts and gravels, may liquefy when exposed to seismic shaking. The site appears to be too stony and the seismic hazard may be too low to cause significant liquefaction of the alluvium. The possibility of thick sand zones beneath the foundations exists, but drilling or other deep subsurface investigation methods were not in the scope of this project.

5.2 Settlement

Significant consolidation of the dense to very dense stony alluvial gravel and cobble is not anticipated.

Design Maps Summary Report

User–Specified Input

Report Title	Badger Creek Bridge Mon May 13, 2013 20:55:17 UTC
Building Code Reference Document	2012 International Building Code (which makes use of 2008 USGS hazard data)
Site Coordinates	43.86276°N, 111.16007°W
Site Soil Classification	Site Class C – "Very Dense Soil and Soft Rock"
Risk Category	I/II/III

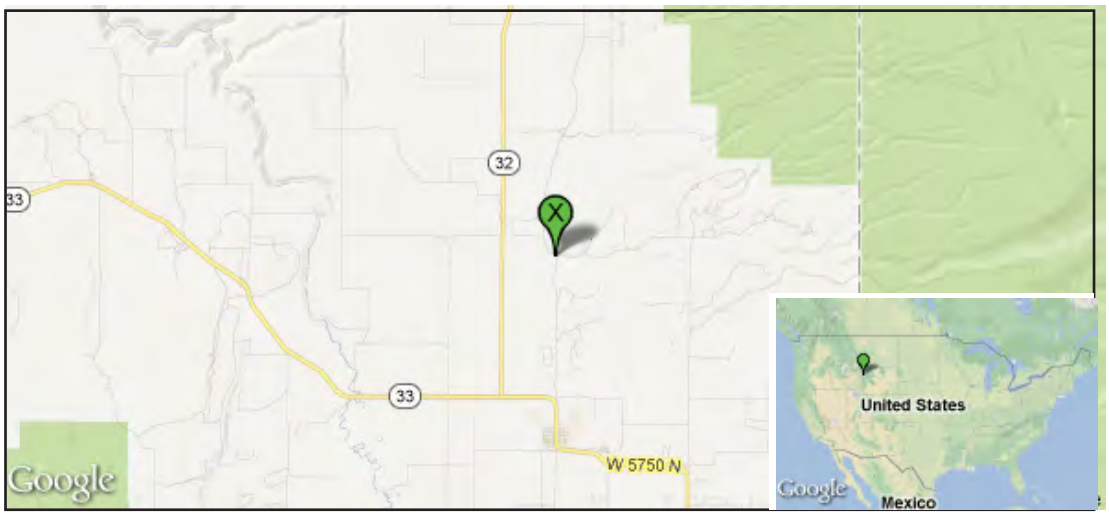

USGS–Provided Output

S_S =	0.731 g	S_{MS} =	0.809 g	S_{DS} =	0.540 g
S_1 =	0.224 g	S_{M1} =	0.353 g	S_{D1} =	0.236 g

For information on how the SS and S1 values above have been calculated from probabilistic (risk-targeted) and deterministic ground motions in the direction of maximum horizontal response, please return to the application and select the "2009 NEHRP" building code reference document.

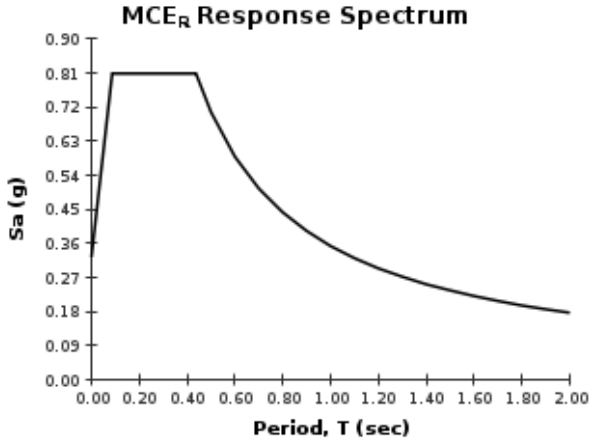

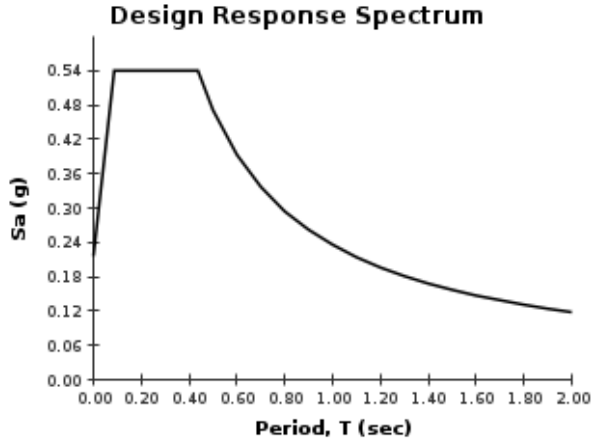

Although this information is a product of the U.S. Geological Survey, we provide no warranty, expressed or implied, as to the accuracy of the data contained therein. This tool is not a substitute for technical subject-matter knowledge.

Design Response Spectrum	WOMACK & ASSOCIATES, INC.	FIGURE
Geotechnical Investigation Report N3000W Badger Creek Bridge Teton County, Idaho	\\server\data\clients\JH\Harmony\Badger Creek\Figure 3 Design Response Spectrum.pdf	3

5.3 Foundations

The dense to very dense gravel and cobble alluvium observed in the test pits on the north and south side of the existing bridge should be an adequate bearing surface for the proposed bridge foundations. The fine-grained silt and clay alluvium should be removed prior to installation of foundation elements. According to project drawings, there should not be a need to import fill materials to replace excavated fine-grained soils. If fill material is needed, the stony alluvium should act as a reliable fill material. Please be aware that analysis of scour that might undermine foundations was outside our scope of work.

5.4 Bearing Capacity for Shallow Foundations

The bearing capacity for the stony alluvial gravel and cobble was estimated using Terzaghi and Vesic's methods (Coduto, 2000). Soil properties were estimated based on visual soil classification. According to the calculations, the estimated bearing capacity is 5,000 psf, assuming a 24-inch wide footing buried 4 feet below the bottom of the creek. Allowable loads may include full dead load and 50% live load.

5.5 Earthwork

Prior to placement of any required structural or granular fill, the site should be cleared and stripped of topsoil and organic debris. No brush, roots, frozen material, or other deleterious or unsuitable materials shall be incorporated in the foundation subgrade or structural fill. During excavation for the foundation footings, removal of boulders or cobbles may disturb and loosen the surrounding sand and gravel. Any disturbed soil should be compacted with a vibrating smooth-drum roller prior to footing construction. Table 5-1 contains compaction parameters for the stony alluvial soils.

Table 5-1: Compaction Parameters for Stony Fill

Compactor Type	Lift Thickness	Maximum Particle Size	Minimum Number of Passes
5-ton vibratory	12 inches	9-inch*	3
1.5-ton vibratory	9 inches	6-inch	5
Hand-held	4 inches	4-inch	5

* Occasional clasts to 12-inch are permitted, but should not be nested

Pre-roll the surface to compact materials that have been disturbed during excavation using a smooth drum vibratory roller (in vibratory mode) with a minimum of three passes. The actual number of passes should be determined by observing whether the surface is yielding after each pass. If the surface appears to be yielding, the number of passes should be increased until a non-yielding condition is observed.

Pit-run and alluvial on-site materials should be relatively easy to compact, and due to the stony nature of the materials, nuclear density testing can yield variable compaction results. Place stony fill in horizontal lifts and compact using the methods specification described above. If the methods specification is consistently applied, density testing is not required. Gravel will compact into a dense, strong, well-drained structural fill, and tight moisture control is usually not required.

5.6 Soil Friction

Terzaghi, et al (1996) suggests use of a maximum of 30 degrees for the friction angle along a concrete base in granular soils. Accordingly, a friction value of 0.58, which is the tangent of 30 degrees, is suggested. The friction value may be combined with the passive pressure to resist horizontal loads.

5.7 Lateral Pressures

Lateral pressures were calculated using methods suggested by Bowles (1996) and strength parameters estimated for stony soils (alluvium and pit-run). Lateral pressures against foundation and retaining walls can be estimated using several methods, and there is no overwhelming consensus favoring any one technique. We have used what we believe to be reasonably conservative values that can be justified from normal practice and the technical literature. The main variables are assumptions regarding seismic forces, wall friction, and surcharge pressures. As discussed above, the Teton Valley area is potentially susceptible to ground shaking from earthquakes. A maximum horizontal seismic acceleration kh in bedrock of 0.15g is predicted for this site with a uniform likelihood of exceedance of 10 percent in 50 years (USGS, 2002). One-half of the maximum acceleration, or 0.07g, was used to estimate lateral loads during an earthquake. Equivalent fluid pressures (γK) will vary based on the slope of the ground surface adjacent to the foundation wall. Lateral pressure increases when the ground surface slopes toward the wall and decreases when the ground surface slopes away from the wall. Lateral pressures were calculated for active, passive, and at-rest conditions for level ground adjacent to the foundation.

Table 5-2: Lateral Earth Pressure Parameters – Stony Materials

Condition	Coefficient of Earth Pressure	γK (equivalent fluid pressure)
Static Conditions Level Backfill	$K_o = 0.43$ $K_a = 0.27$ $K_p = 3.69$	$\gamma K_o = 58$ pcf $\gamma K_a = 37$ pcf $\gamma K_p = 498$ pcf
Earthquake Conditions Level Backfill	$K_{ae} = 0.31$ $K_{pe} = 3.55$	$\gamma K_{ae} = 42$ pcf $\gamma K_{pe} = 480$ pcf

*Assumes a unit weight for the backfill of 135 pcf and a friction angle of 35°.

Research has indicated that lateral pressures due to earthquakes are non-hydrostatic in distribution, and the resultant acts above the lower third-point of the wall (Bakeer, et al., 1990). Accordingly,

active soil pressures have been divided into two components that act at different wall heights. The static force acts at the lower third-point, as discussed above. The Mononobe-Okabe equations were used to estimate dynamic forces against retaining walls using half the maximum horizontal acceleration (Bowles, 1996; Hynes and Franklin, 1984; Whitman, 1990). The dynamic component is estimated as $0.5(\gamma K_{ae} - \gamma K_a)$, i.e., about $2.5H^2$ pounds per foot of wall applied at 60% of the wall height.

Passive earth pressures were calculated using the Coulomb and Mononobe-Okabe equations (Bowles, 1996).

At rest earth pressures (γK_o) assume a horizontal ground surface behind the foundation wall. Use the at-rest pressure or the active pressure under seismic conditions for foundation wall design, whichever is greater.

5.8 Excavation and Cut Slope Stability

OSHA regulations (29CFR1926) classify the alluvial soil at the site as Type C soil. Simple cut slopes in the stony alluvium should be no steeper than 1.5H:1V. The contractor shall be responsible for adherence to OSHA and other safety regulations.

5.9 Filter Criteria

According to HEC-11 and other sources, a graded filter should meet the following criteria:

D15 (filter)/D85 (soil)<5< D15 (filter)/D15 (soil)<40

We estimate the D15 of the soil to be about 0.002 mm (clay size), and D85 from the grain size curve is 20 mm. Therefore, D15 of the filter should be less than 100 mm to meet the first criterion, and between 0.01 mm and 0.08 mm and to meet the second, implying that fine sand would be an appropriate filter.

5.10 Dewatering during Construction

Due to the shallow groundwater, dewatering may be necessary during construction. If possible, it would be best to wait for the water levels to drop, which should occur in the late summer, although detailed creek discharge profiles were not available at the time of this report. The contractor will ultimately be responsible for mitigating groundwater levels during construction.

5.11 Observation during Construction

If any unexpected soils or conditions are revealed during construction, this office should be notified immediately to survey the conditions and make necessary modifications. This office should be notified when the bottom of footing depth is reached so that we may observe the bearing soils.

6.0 LIMITATIONS

This report has been prepared based on a limited amount of data. Actual site conditions may vary. The report is for single use and under no circumstances are the figures and text to be used separately. These services have been performed in a manner consistent with the level of care and skill ordinarily exercised by members of the profession currently practicing in this area under similar conditions. No other warranty is made or implied.

7.0 REFERENCES

Bakeer, R.M., S.K. Bhatia, and I. Ishibashi, 1990, Dynamic Earth Pressure with Various Gravity Wall Movements in Design and Performance of Earth Retaining Structures (P.C. Lambe and L.A. Hansen ed): ASCE Geotechnical Special Publication 25, p. 887-899.

Bowles, J.E., 1996, Foundation Analysis and Design, 5th Ed.: McGraw-Hill.

Gilbert, J.D., Ostenaa, D., and Wood, C., 1983, Seismotectonic study of Jackson Lake Dam and Reservoir: U.S. Bureau of Reclamation Seismotectonic Report 83-8, Minidoka Project, Idaho-Wyoming, 123P.

Hynes, M.E., and Franklin, A.G., 1984, Rationalizing the Seismic Coefficient Method: U.S. Army Corps of Engineers, Waterways Experiment Station, Miscellaneous Paper GL-84-13.

International Building Code, 2006, International Code Council, Inc, Chapter 16, Section 1613 Earthquake Loads – Site Ground Motion.

Love, J.D., and Albee, H.F., 1972, Geologic Map of the Jackson Quadrangle, Teton County, Wyoming: USGS Map I-769-A , Scale 1:24,000.

Machette, M.N., K.L. Pierce, J.P. McCalpin, K.M. Haller, and R.L. Dart, 2001, Map and Data for Quaternary Faults and Folds in Wyoming: USGS OFR 01-461.

McCalpin, J.P., Machette, M.N., and Haller, K.M., 1994, Fault number 726b, Grand Valley fault, Grand Valley section, in Quaternary fault and fold database of the United States: U.S. Geological Survey website, http://earthquakes.usgs.gov/regional/qfaults

Naval Facilities Engineering Command, 1986, NAVFAC Design Manual 7.02, Foundations and earth structures.

O'Connell, D.R.H., Wood, C.K., Ostenaa, D.A., Block, L.V., and LaForge, R.C., 2003, Final Report, Ground Motion Evaluation for Jackson Lake Dam, Minidoka Project, Wyoming: U.S. Bureau of Reclamation Report 2003-2.

Prostka, H.J., Hackman, R.J., 1974, Preliminary Geologic Map of the Northwest ¼ Driggs 1 by 2 Quadrangle, Southeast Idaho, United States Geological Survey, Open File Report OF-74-105, 1:125,000.

Seed, H.B., and Idriss, I.M., 1982, Ground Motions and Soil Liquefaction during Earthquakes: Monograph Series, EERI, Oakland, California.

Seed, H.B., and Idriss, I.M., 1981, Evaluation of Liquefaction Potential of Sand Deposits based on Observations of Performance in Previous Earthquakes: ASCE In-situ Testing To Evaluate Liquefaction Susceptibility, Preprint 81-544.

Smith, R.B. and Arabasz, W.J., 1991, Seismicity of the Intermountain Seismic Belt, in Slemmons, D.B., Engdahl, E.R., Zoback, M.L., and Blackwell, D.D., editors, Neotectonics of North America: Geological Society of America, Decade Map Volume 1, p. 185-228.

Stark, T.D., and Mesri, G., 1992, Undrained shear strength of liquefied sands for stability analysis, Journal of Geotechnical Engineering, Volume 118, No. 11, ASCE, pp. 1727-1747

Tokimatsu K. and Seed H.B. 1987. Evaluation of settlements in sands due to earthquake shaking, Journal Geotechnical Engineering., ASCE, Volume 113, No. 8

U.S. Geological Survey, Earthquake Hazards Program, Seismic Design Values for Buildings, http://earthquake.usgs.gov/research/hazmaps/design/, accessed in 2013.

Whitman, R.V., 1990, Seismic Design and Behavior of Gravity Retaining Walls in Design and Performance of Earth Retaining Structures (P.C. Lambe and L.A. Hansen ed): ASCE Geotechnical Special Publication 25, p. 817-842.

Youd, et al, 2001, Liquefaction Resistance of Soils: Summary Report from the 1996 NCEER and 1998 NCEER/NSF Workshops on Evaluation of Liquefaction Resistance of Soils, ASCE Jour. Geotechnical and Geoenvironmental Engineering, Volume 127, No. 10

APPENDIX A

TEST PIT LOGS

WOMACK & ASSOCIATES, INC.
Geotechnical Engineering
Geology

POB 12650
Jackson, WY 83002
Telephone: 3077337209
Fax:

TEST HOLE LOG

PROJECT NAME: Badger Creek Bridge	DATE: 5/2/13
PROJECT LOCATION: East of Felt, Idaho, 3000 + 10000 N Intersection	HOLE NO.: TP-1
TEST HOLE LOCATION: ~35' south of south abutment	

ELEVATION G.S. (ft.):	TOTAL DEPTH (ft.): 5.5	GROUNDWATER LEVEL (ft.): 4	MEASURED FROM: Surface
DRILL TYPE: Case 580 Super L	HAMMER:	DRILL CO: Greeneck Earthworks	DRILLER: Colin / LOGGED BY: jr

DEPTH (ft.)	GRAPHICAL LOG	SAMPLE	S.P.T. (N) BLOWS/6 IN.	(N1)60 BLOWS/FT.	RECOVERY (%)	UNCONFINED STRENGTH (TSF)	CLASSIFICATION	DESCRIPTION COMMENTS: Ground surface is downed cottonwoods.	MOISTURE CONTENT (%)	DRY DENSITY (PCF)	LIQUID LIMITS (%)	PLASTICITY INDEX (%)	WELL COMPLETION
1, 2, 3								0.0-4.0ft Silty Clayey SAND with Gravel: Moist to saturated, brown, very loose to loose [ALLUVIUM]					
4, 5								4.0-5.5ft Sandy GRAVEL/COBBLE: Wet to saturated, brown, dense, clasts up to 5" diameter [ALLUVIUM] Note: Hole caving. Ground surface is ~1.5' below top of bridge. Groundwater at 4.0'. Filled hole with spoils.					
6, 7, 8, 9, 10, 11, 12, 13, 14													

WOMACK & ASSOCIATES, INC.
Geotechnical Engineering
Geology

POB 12650
Jackson, WY 83002
Telephone: 3077337209
Fax:

TEST HOLE LOG

PROJECT NAME: Badger Creek Bridge	DATE: 5/2/13
PROJECT LOCATION: East of Felt, Idaho, 3000 + 10000 N Intersection	HOLE NO.: TP-2
TEST HOLE LOCATION: North of bridge ~30', west side ditch	

ELEVATION G.S. (ft.):	TOTAL DEPTH (ft.): 4.5	GROUNDWATER LEVEL (ft.): 3	MEASURED FROM: Surface
DRILL TYPE: Case 580 Super L	HAMMER:	DRILL CO: Greeneck Earthworks	DRILLER: Colin / LOGGED BY: jr

DEPTH (ft.)	GRAPHICAL LOG	SAMPLE	S.P.T. (N) BLOWS/6 IN.	(N1)60 BLOWS/FT.	RECOVERY (%)	UNCONFINED STRENGTH (TSF)	CLASSIFICATION	DESCRIPTION	MOISTURE CONTENT (%)	DRY DENSITY (PCF)	LIQUID LIMITS (%)	PLASTICITY INDEX (%)	WELL COMPLETION
								COMMENTS: Ground surface is downed cottonwoods and willow brush.					
1, 2								0.0-3.0ft Silty Clayey SAND with Gravel: Moist to saturated, brown, very loose to loose, plastic to highly plastic, abundant roots [ALLUVIUM]					
3, 4								3.0-4.5ft Sandy GRAVEL/COBBLE: Saturated, brown, dense, rounded to subrounded cobbles to 6" diameter [ALLUVIUM] Note: Hole caving, easy digging. Groundwater at 3.0' (east side of pit, 2' west side of pit). Backfilled pit with spoils.					
5, 6, 7, 8, 9, 10, 11, 12, 13, 14													

APPENDIX B

LABORATORY TEST DATA

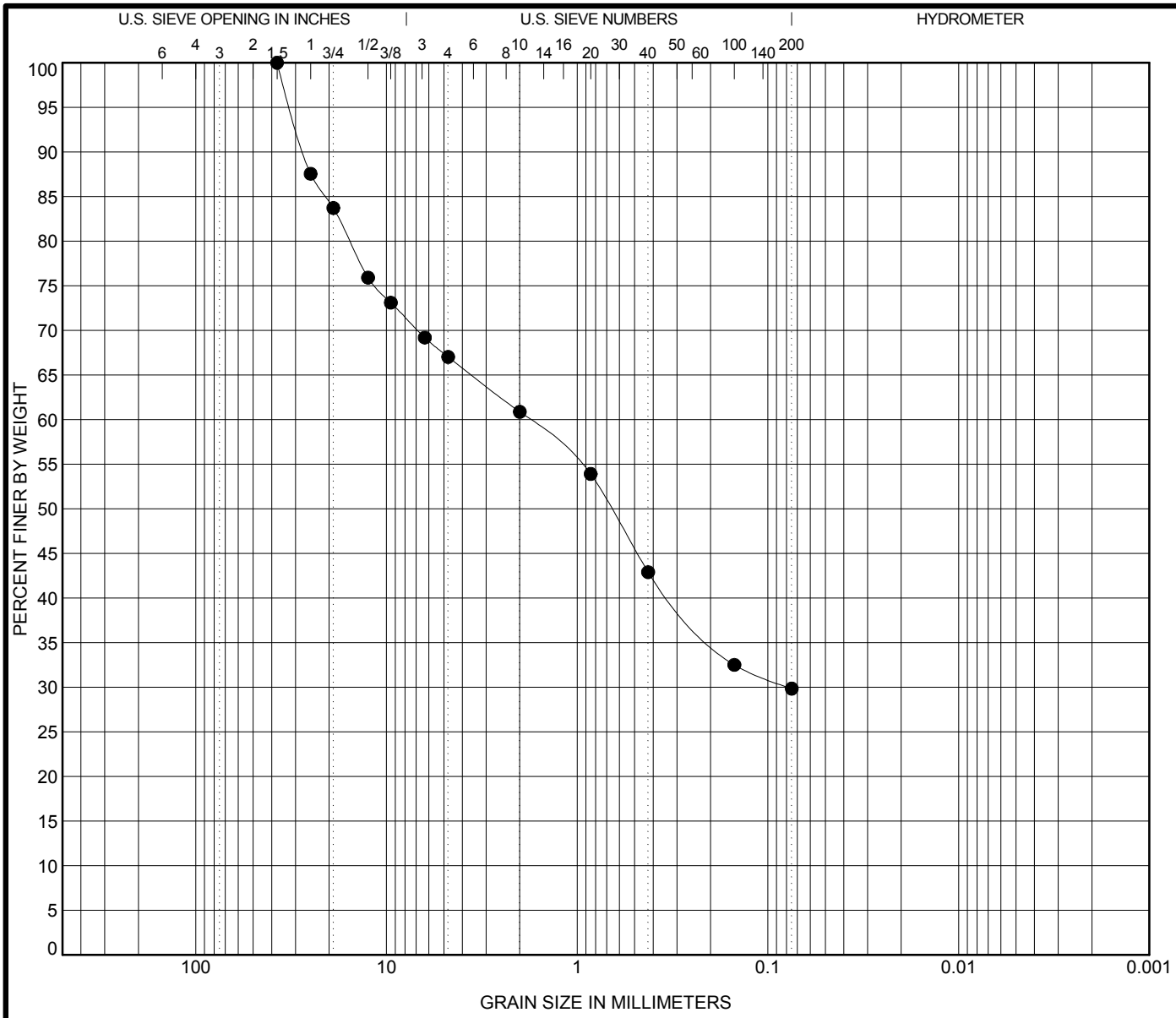

COBBLES	GRAVEL		SAND			SILT OR CLAY
	coarse	fine	coarse	medium	fine	

	Specimen Identification		Classification	LL	PL	PI	Cc	Cu
●	**TP-1**	**1.0**	**SILTY, CLAYEY SAND with GRAVEL(SC-SM)**	**20**	**13**	**7**		

	Specimen Identification		D100	D60	D30	D10	%Gravel	%Sand	%Silt	%Clay
●	**TP-1**	**1.0**	**37.5**	**1.796**	**0.078**		**33.0**	**37.2**	**29.8**	

Womack & Associates, Inc.
POB 12650
Jackson, WY 83002
Telephone: 3077337209
Fax:

GRAIN SIZE DISTRIBUTION

Project: Badger Creek Bridge

Location: East of Felt, Idaho, 3000 + 10000 N Intersection

Number:

US_GRAIN_SIZE_BADGER CREEK BRIDGE.GPJ US_LAB.GDT 5/16/13

N 3000 W BADGER CREEK BRIDGE & CHANNEL RESTORATION

CONSTRUCTION DRAWINGS

(BID SET) APRIL 5, 2013

INDEX OF DRAWINGS

CIVIL DESIGN DRAWINGS (BY HARMONY DESIGN AND ENGINEERING)

C-001	COVER SHEET, LEGEND
C-100	ROAD AND BRIDGE PLAN AND PROFILE
C-200	CIVIL DETAILS AND NOTES

PRECAST BRIDGE DRAWING PACKAGE (BY CONTECH)

1	DESIGN CRITERIA AND PLAN VIEW
2	ARCH, FOOTING AND WIINGWALL DETAILS
3	END VIEW PROFILES
4	INSTALLATION AND MANUFACTURING SPECIFICATIONS
5	INSTALLATION AND MANUFACTURING SPECIFICATIONS (CONT)

BADGER CREEK RESTORATION DESIGN PACKAGE (BY BIOTA)

TL-1	TITLE SHEET
SL-1	SITE LOCATION
SP-1	SITE PLAN INDEX
SP-2	SITE PLAN SHEET 1
SP-3	SITE PLAN SHEET 3
DT-1	ROCK VANES
DT-2	J-HOOD VANES
DT-3	ROOTWAD/LOG REVETMENTS
DT-4	DESIGN CHANNEL GEOMETRY
DT-5	DESIGN CHANNEL PROFILE

LEGEND

- 6110 — EXISTING MAJOR CONTOUR
- 6111 — EXISTING MINOR CONTOUR
- EXISTING EDGE OF GRAVEL ROAD
- EXISTING RIGHT OF WAY
- 6115 — PROPOSED MAJOR CONTOUR
- 6114 — PROPOSED MINOR CONTOUR
- PROPOSED GRAVEL ROAD (TRAVELWAY)
- PROPOSED GRAVEL SHOULDER
- PROPOSED RIPRAP
- SF — PROPOSED SILT FENCE

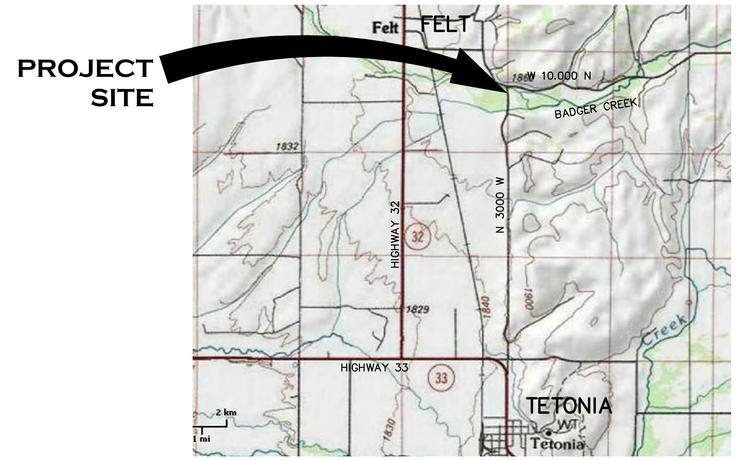

VICINITY MAP

NOT TO SCALE

CIVIL ENGINEER:
HARMONY DESIGN & ENGINEERING
110 E. LITTLE AVENUE
DRIGGS, ID 83422
208-354-1331

SURVEYOR:
JORGENSEN ASSOCIATES, PC
P.O. BOX 9550
1315 S. HWY 89, SUITE 203
JACKSON, WY 83002
307-733-5187

ENVIRONMENTAL CONSULTANT:
BIOTA RESEARCH AND CONSULTING, INC.
P.O. BOX 8578
140 E. BROADWAY, SUITE 23
JACKSON, WY 83002
307-733-4216

CALL BEFORE YOU DIG
ONE CALL CENTER OF IDAHO
1-800-342-1585
CALL 2-BUSINESS DAYS IN ADVANCE BEFORE YOU DIG, GRADE, OR EXCAVATE FOR THE MARKING OF UNDERGROUND MEMBER UTILITIES.

NOTE: ALL SCALES INDICATED ARE FOR 24" X 36" PLOTTED SHEETS

HARMONY
DESIGN & ENGINEERING
110 E. LITTLE AVE. • DRIGGS ID 83422
T 208.354.1331 F 208.354.1332

DATE: 4-5-2013 (BID SET)
REVISIONS:

PROFESSIONAL ENGINEER REGISTERED 11339 STATE OF IDAHO JENNIFER P. ZUNG

SCALE: AS SHOWN
DESIGNED BY: RGB
DRAWN BY: RGB
CHECKED BY: JPZ
PROJ. #: 11002

PROJECT NAME
N 3000 W BADGER CREEK BRIDGE
TETON COUNTY, IDAHO

COVER SHEET

SHEET #
C-001

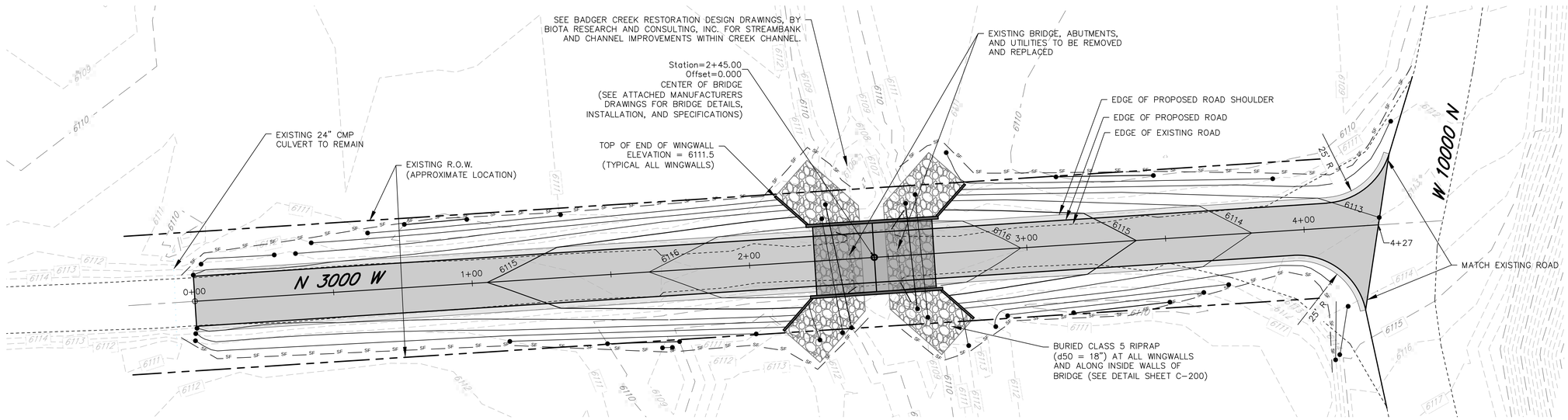

N 3000 W - PLAN

20 10 0 20 40
SCALE: 1" = 20'

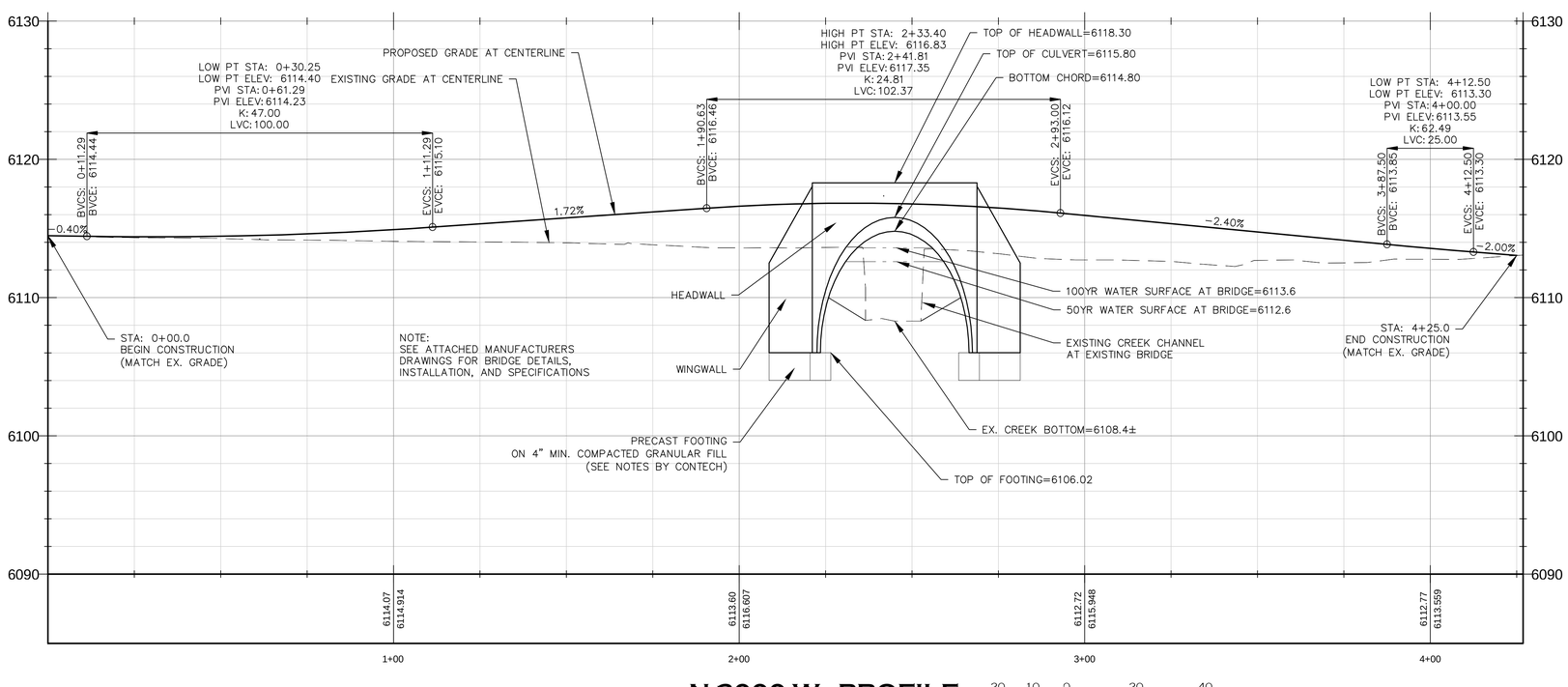

N 3000 W - PROFILE

20 10 0 20 40
HORIZONTAL SCALE: 1" = 20'
VERTICAL SCALE: 1" = 5'

NOTE: ALL SCALES INDICATED ARE FOR 24" X 36" PLOTTED SHEETS

HARMONY
DESIGN & ENGINEERING
110 E. LITTLE AVE. • DRIGGS ID 83422
T 208.354.1331 F 208.354.1332

DATE: 4-5-2013 (BID SET)
REVISIONS:

PROFESSIONAL ENGINEER REGISTERED 11339 STATE OF IDAHO JENNIFER P. ZUNING

SCALE: AS SHOWN
DESIGNED BY: RGB
DRAWN BY: RGB
CHECKED BY: JPZ
PROJ. #: 11002

PROJECT NAME
N 3000 W BADGER CREEK BRIDGE
TETON COUNTY, IDAHO
ROADWAY AND CULVERT PLAN AND PROFILE

SHEET #
C-100

GENERAL NOTES

1. THE CONTRACTOR SHALL CONTACT "DIG LINE, INC." (PHONE 1–800–342–1585) FOR THE MARKING OF UNDERGROUND UTILITIES AT LEAST 48 HOURS PRIOR TO CONSTRUCTION. THE CONTRACTOR SHALL ACCEPT FULL RESPONSIBILITY AND TAKE PRECAUTIONARY MEASURES TO PROTECT ALL UTILITY LINES SHOWN AND OTHER UTILITY LINES OTHERWISE LOCATED.
2. THE INFORMATION SHOWN ON THESE DRAWINGS CONCERNING TYPE AND LOCATION OF UNDERGROUND AND OTHER UTILITIES IS NOT GUARANTEED TO BE ACCURATE OR ALL INCLUSIVE. THE CONTRACTOR SHALL BE RESPONSIBLE FOR CONTACTING THE AFFECTED UTILITY COMPANY AND THE COORDINATION OF ALL WORK IN THE PROXIMITY OF THE UTILITIES.
3. THE CONTRACTOR SHALL VERIFY LOCATIONS OF ALL EXISTING UTILITIES AND ALL DIMENSIONS IN THE FIELD AND SHALL REPORT ANY VARIATIONS OR DISCREPANCIES TO THE OWNER AND THE ENGINEER PRIOR TO PROCEEDING WITH RELATED CONSTRUCTION.
4. ALL CONNECTIONS TO EXISTING UTILITIES SHALL BE DONE IN A WAY SO AS TO MINIMIZE DISRUPTION IN SERVICE TO EXISTING USERS.
5. THE CONTRACTOR SHALL BE RESPONSIBLE FOR RESTORING ALL EXISTING ROAD AND DRIVEWAY SURFACES AND RELATED STRUCTURES TO ORIGINAL CONDITIONS (OR BETTER) AND GRADES, UNLESS DESIGNATED OTHERWISE ON THE DRAWINGS. THE OWNER OR OWNER'S REPRESENTATIVE AND THE CONTRACTOR SHALL TOGETHER COORDINATE THE DOCUMENTATION OF EXISTING GRADES AND OTHER INFORMATION PRIOR TO ALL CONSTRUCTION ACTIVITIES.
6. THE CONTRACTOR SHALL HAVE A COMPLETE AND UPDATED SET OF ENGINEERING CONSTRUCTION DRAWINGS AND ANY REQUIRED PERMITS ON SITE AT ALL TIMES. IF NO PLANS ARE ON THE PROJECT SITE, CONSTRUCTION ACTIVITIES MAY BE HALTED AT THE DISCRETION OF THE OWNER.
7. BEFORE WORK BEGINS, THE CONTRACTOR SHALL OBTAIN ALL NECESSARY PERMITS AND MUST NOTIFY THE REQUIRED PARTIES AT LEAST 24 HOURS IN ADVANCE OF COMMENCING CONSTRUCTION ACTIVITIES.
8. ALL SURPLUS MATERIAL, TOOLS, AND TEMPORARY STRUCTURES, FURNISHED BY THE CONTRACTOR, SHALL BE REMOVED FROM THE PROJECT SITE BY THE CONTRACTOR. ALL DEBRIS AND RUBBISH CAUSED BY THE OPERATIONS OF THE CONTRACTOR SHALL BE REMOVED, AND THE AREA OCCUPIED DURING CONSTRUCTION ACTIVITIES SHALL BE RESTORED TO ITS ORIGINAL CONDITION, WITHIN 48 HOURS OF PROJECT COMPLETION.
9. ALL ROAD CONSTRUCTION SHALL CONFORM TO THE THE TETON COUNTY HIGHWAY AND STREET GUIDELINES FOR DESIGN AND CONSTRUCTION AND THE IDAHO STANDARDS FOR PUBLIC WORKS CONSTRUCTION (ISPWC–2007) AS AMENDED. THE CONTRACTOR IS REQUIRED TO MAINTAIN A COPY OF EACH STANDARD ON THE JOB SITE WHILE WORK IS BEING PERFORMED. IN CASES OF CONFLICT BETWEEN THE STANDARDS, THE CONTRACTOR SHALL FOLLOW THE TETON COUNTY STANDARDS FIRST.
10. EXISTING TOPOGRAPHIC DATA SHOWN ON THESE DRAWINGS IS FROM THE TOPOGRAPHIC SURVEY OF "BADGER CREEK BRIDGE N 3000 W COUNTY ROAD 10000N" BY JORGENSEN ASSOCIATES. P.C., DATED DECEMBER 14, 2012. VERTICAL DATUM NAVD 88.
11. ALL SUB–GRADE AND ROAD AGGREGATES SHALL BE COMPACTED TO A MINIMUM OF 95% OF MAXIMUM DENSITY, AS DETERMINED BY ASTM D698. EXISTING IN PLACE SOILS THAT ARE TO BE USED FOR SUB–GRADE SHALL BE SCARIFIED TO A DEPTH OF 6" (INCHES) AND THEN SHALL BE RECOMPACTED TO THE ABOVE REFERENCED DENSITY. ALL EXISTING VEGETATION AND TOPSOIL MUST BE STRIPPED PRIOR TO SUB–GRADE SCARIFICATION AND RECOMPACTION.
12. THE CONTRACTOR SHALL COMPLY WITH ALL APPLICABLE FEDERAL, STATE, AND LOCAL LAWS, RULES, REGULATIONS AND SAFETY CODES IN THE CONSTRUCTION OF ALL IMPROVEMENTS.
13. EXCAVATIONS SHALL BE ADEQUATELY SHORED AND BRACED TO PREVENT COLLAPSE.
14. TOPSOIL, VEGETATION, AND UNSTABLE OR FROZEN SOIL SHALL BE REMOVED PRIOR TO CONSTRUCTING STRUCTURES OR EMBANKMENTS.
15. SEE BRIDGE INSTALLATION NOTES BY CONTECH FOR ADDITIONAL BACKFILL AND COMPACTION REQUIREMENTS.

EROSION CONTROL NOTES

1. TO THE EXTENT PRACTICABLE, EROSION AND SEDIMENT CONTROL MEASURES SHALL BE INSTALLED PRIOR TO GRADING ACTIVITIES. AT ALL TIMES DURING PROJECT CONSTRUCTION, ALL TEMPORARY AND PERMANENT EROSION AND SEDIMENT CONTROL MEASURES SHALL BE MAINTAINED AND REPAIRED AS NEEDED TO PREVENT ACCELERATED EROSION ON THE SITE AND ANY ADJACENT PROPERTIES. KEEP LAND DISTURBANCE TO A MINIMUM. PLAN THE PHASES OF CONSTRUCTION SO THAT ONLY THE AREAS ACTIVELY BEING DEVELOPED ARE EXPOSED. ALL OTHER AREAS SHOULD HAVE NATURAL VEGETATION PRESERVED, HAVE GOOD TEMPORARY COVER, OR PERMANENT VEGETATION ESTABLISHED.
2. ALL TOPSOIL, WHERE PHYSICALLY PRACTICABLE, SHALL BE SALVAGED AND NO TOPSOIL SHALL BE REMOVED FROM THE SITE. TOPSOIL AND OVERBURDEN SHALL BE SEGREGATED AND STOCKPILED SEPARATELY. RUNOFF FROM STOCKPILED AREA SHALL BE CONTROLLED TO PREVENT EROSION AND SEDIMENTATION.
3. PERMANENT VEGETATIVE COVER SHALL BE APPLIED TO DISTURBED AREAS WITHIN 14 DAYS AFTER FINAL GRADE IS REACHED ON ANY PORTION OF THE SITE. TEMPORARY VEGETATIVE COVER SHALL BE APPLIED WITHIN 14 DAYS TO DISTURBED AREAS WHICH MAY NOT BE AT FINAL GRADE, BUT WILL BE LEFT DORMANT FOR LONGER THAN 60 DAYS.

   TEMPORARY VEGETATIVE COVER SHALL CONSIST OF ANNUAL RYEGRASS AT 40 LBS PLS/ACRE. SEEDED AREAS SHALL BE HYDROMULCHED WITH A WOOD FIBER AND TACKIFIER AT 1 TON/ACRE.

   PERMANENT VEGETATIVE COVER – DROUGHT TOLERANT NATIVE GRASS SEED MIXTURE.
4. ALL DISTURBED AREAS SHALL RECEIVE PERMANENT VEGETATIVE COVER AS DESCRIBED ABOVE. ALL CUT OR FILL SLOPES WITH 3 TO 1 OR GREATER SLOPE SHALL BE COVERED WITH EROSION CONTROL MATTING OR HYDROMULCHED WITH A WOOD FIBER AND TACKIFIER AT 1 TON/ACRE.
5. ALL EROSION CONTROL MEASURES SHALL BE INSPECTED BY THE OWNER, OR OWNER APPROVED AGENT, AFTER ALL STORM EVENTS. ANY EROSION CONTROL MEASURES WHICH ARE DAMAGED PRIOR TO RE–ESTABLISHMENT OF VEGETATIVE COVER SHALL BE REPLACED IMMEDIATELY. THE REPAIR OF ANY COMPONENT OF THE SYSTEM SHALL BE MADE AS SOON AS POSSIBLE TO PREVENT ANY POTENTIAL POLLUTANTS, INCLUDING SILT, FROM EXITING THE DISTURBED AREA.

MAINTENANCE SCHEDULE DURING CONSTRUCTION

SEDIMENT CONTROL	INSPECTION	MAINTENANCE THRESHOLDS	MAINTENANCE ACTION
SILT FENCE	WEEKLY & AFTER 0.5 INCHES OF RAINFALL	SYSTEM INTEGRITY IS COMPROMISED	CLEAN OUT SEDIMENT REPLACE IF DAMAGED

6. THE CONTRACTOR SHALL BE RESPONSIBLE FOR THE REMOVAL OF ALL TEMPORARY EROSION CONTROL DEVICES AFTER THE ESTABLISHMENT OF FULL VEGETATION.
7. MEANS OF EROSION AND SEDIMENT PROTECTION AS NOTED ON THE DRAWINGS INDICATE THE MINIMUM PROVISIONS NECESSARY. ADDITIONAL MEANS OF PROTECTION SHALL BE PROVIDED BY THE CONTRACTOR AS REQUIRED FOR CONTINUED OR UNFORESEEN EROSION PROBLEMS, AT NO ADDITIONAL EXPENSE TO THE OWNER.
8. CONSTRUCTION OPERATIONS SHALL BE PERFORMED TO PREVENT EROSION, SEDIMENT, AND DEBRIS FROM ENTERING BADGER CREEK.
9. CONSTRUCTION OPERATIONS SHALL BE PERFORMED TO PREVENT DISTURBANCE TO WETLAND AREAS. NO AREAS DESIGNATED AS WETLANDS ARE TO BE FILLED WITHOUT FIRST OBTAINING NECESSARY PERMITS FROM THE ARMY CORPS OF ENGINEERS. NO IN–STREAM CONSTRUCTION ACTIVITIES SHALL BE PERFORMED IN BADGER CREEK WITHOUT FIRST OBTAINING NECESSARY PERMITS FROM THE ARMY CORPS OF ENGINEERS.
10. CLASS 5 RIPRAP SHALL HAVE THE FOLLOWING GRADATION:
    D15 = 11.0 – 15.5 INCHES
    D50 = 17.0 – 20.5 INCHES
    D85 = 23.5 – 27.4 INCHES
    D100 = 36.0 INCHES

REVEGETATION NOTES

1. CLEAR AND GRUB AREAS OF PROPOSED GRADING. EXISTING PLANT MATERIALS MAY BE SALVAGED FOR TRANSPLANTING. STRIP EXISTING TOPSOIL IN AREAS OF PROPOSED EARTHWORK. STOCKPILE TOPSOIL AND SAVE FOR RE–USE AFTER ROUGH GRADING IS COMPLETED.
2. TOPSOIL AND OVERBURDEN SHALL BE REDISTRIBUTED WITHIN THE GRADED AREA AFTER ROUGH GRADING TO PROVIDE A SUITABLE BASE FOR AREAS WHICH WILL BE SEEDED AND PLANTED. SPREAD A MINIMUM OF 4" OF TOPSOIL OVER ALL DISTURBED AREAS. PROVIDE IMPORTED TOPSOIL IF STRIPPED AND SALVAGED TOPSOIL QUANTITIES ARE INSUFFICIENT.
3. SEED AND MULCH ALL DISTURBED AREAS WITH DROUGHT TOLERANT NATIVE SEED MIXTURE TO MATCH EXISTING ADJACENT NATIVE VEGETATION.
4. PROVIDE CONTINUOUS MAINTENANCE INCLUDING WATERING, WEED CONTROL, AND RE–SEEDING AS NECESSARY UNTIL THE VEGETATION IS ESTABLISHED.

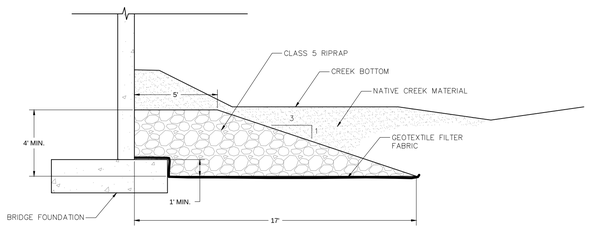

RIPRAP DETAIL
NOT TO SCALE

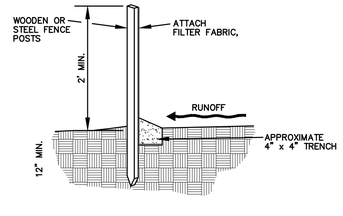

SILT FENCE DETAIL
NOT TO SCALE

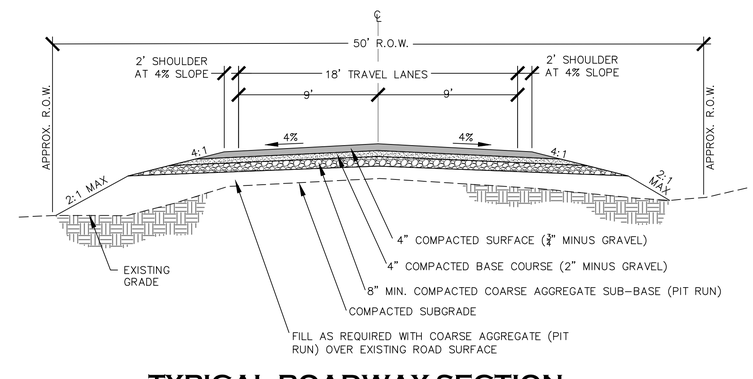

TYPICAL ROADWAY SECTION
NOT TO SCALE

CALL BEFORE YOU DIG
ONE CALL CENTER OF IDAHO
1–800–342–1585
CALL 2-BUSINESS DAYS IN ADVANCE BEFORE YOU DIG, GRADE, OR EXCAVATE FOR THE MARKING OF UNDERGROUND MEMBER UTILITIES.

NOTE: ALL SCALES INDICATED ARE FOR 24" X 36" PLOTTED SHEETS

HARMONY
DESIGN & ENGINEERING
110 E. LITTLE AVE. • DRIGGS ID 83422
T 208.354.1331 F 208.354.1332

DATE: 4-5-2013 (BID SET)
REVISIONS:

PROFESSIONAL REGISTERED ENGINEER 11339 STATE OF IDAHO JENNIFER P. SUNDG

SCALE: AS SHOWN
DESIGNED BY: RGB
DRAWN BY: RGB
CHECKED BY: JPZ
PROJ. #: 11002

PROJECT NAME
N 3000 W BADGER CREEK BRIDGE
TETON COUNTY, IDAHO

DETAILS AND NOTES

SHEET #
C-200

PLAN SET INDEX	
Sheet 1	Design Criteria and Plan View
Sheet 2	Arch, footing & wingwall details
Sheet 3	End views profiles
Sheet 4	Installation & manufacturing specifications
Sheet 5	Installation & manufacturing specifications continued

NOTES

GENERAL NOTES:

1. THIS BRIDGE HAS BEEN DESIGNED FOR GENERAL SITE CONDITIONS. THE PROJECT ENGINEER SHALL BE RESPONSIBLE FOR THE STRUCTURE'S SUITABILITY TO THE EXISTING SITE CONDITIONS AND FOR THE HYDRAULIC EVALUATION -- INCLUDING SCOUR AND CONFIRMATION OF SOIL CONDITIONS.

2. PRIOR TO CONSTRUCTION, CONTRACTOR MUST VERIFY ALL ELEVATIONS SHOWN THROUGH THE ENGINEER.

3. ONLY CONTECH BRIDGE SOLUTIONS INC. THE CON/SPAN® APPROVED PRECASTER IN IDAHO MAY PROVIDE THE STRUCTURE DESIGNED IN ACCORDANCE WITH THESE PLANS.

4. THE USE OF ANOTHER PRECAST STRUCTURE WITH THE DESIGN ASSUMPTIONS USED FOR THE CON/SPAN® STRUCTURE MAY LEAD TO SERIOUS DESIGN ERRORS. USE OF ANY OTHER PRECAST STRUCTURE WITH THIS DESIGN AND DRAWINGS VOIDS ANY CERTIFICATION OF THIS DESIGN AND WARRANTY. CONTECH BRIDGE SOLUTIONS INC. ASSUMES NO LIABILITY FOR DESIGN OF ANY ALTERNATE OR SIMILAR TYPE STRUCTURES.

5. ALTERNATE STRUCTURES MAY BE CONSIDERED, PROVIDED THAT SIGNED AND SEALED DESIGN DRAWINGS (AND CALCULATIONS) ARE SUBMITTED TO THE ENGINEER 2 WEEKS PRIOR TO THE BID DATE FOR REVIEW AND APPROVAL.

6. PROPOSED ALTERNATES TO A CON/SPAN® BRIDGE SYSTEM MUST SUBMIT AT LEAST TWO (2) INDEPENDENTLY VERIFIED FULL SCALE LOAD TESTS THAT CONFIRM THE PROPOSED DESIGN METHODOLOGY OF THE THREE SIDED/ARCH STRUCTURE(S). THE PROPOSED ALTERNATE, UPON SATISFACTORY CONFIRMATION OF DESIGN METHODOLOGY, MAY BE CONSIDERED AN ACCEPTABLE ALTERNATE.

DESIGN DATA

DESIGN LOADING:
BRIDGE UNITS: HS20-44
HEADWALLS: EARTH PRESSURE + LIVE LOAD IMPACT
WINGWALLS: EARTH PRESSURE + LIVE LOAD SURCHARGE
DESIGN FILL HEIGHT: 1'-0" MIN. TO 2'-0" MAX. FROM TOP OF CROWN TO TOP OF PAVEMENT.
DESIGN METHOD: LOAD FACTOR PER AASHTO SPECIFICATION
ASSUMED NET ALLOWABLE SOIL BEARING PRESSURE: 4000 PSF *
ASSUMED GROSS ALLOWABLE SOIL BEARING PRESSURE: 4000 PSF *

*AT THE TIME OF DESIGN, A GEOTECHNICAL REPORT FOR THE PROJECT SITE WAS NOT AVAILABLE. IT IS THE PROJECT ENGINEER'S, OWNER'S AND/OR THE CONTRACTOR'S RESPONSIBILITY TO VERIFY THAT THE ACTUAL SITE CONDITIONS AT THE TIME OF CONSTRUCTION ARE CONSISTENT WITH THE ASSUMED ALLOWABLE SOIL BEARING PRESSURE WITH A GEOTECHNICAL INVESTIGATION FROM A QUALIFIED GEOTECHNICAL ENGINEER.

MATERIALS

PRECAST UNITS SHALL BE CONSTRUCTED AND INSTALLED IN ACCORDANCE WITH CON/SPAN® SPECIFICATIONS. CONCRETE FOR FOOTINGS SHALL HAVE A MINIMUM COMPRESSIVE STRENGTH OF 4000 PSI. REINFORCING STEEL FOR FOOTINGS SHALL CONFORM TO ASTM A615 OR A996-GRADE 60.

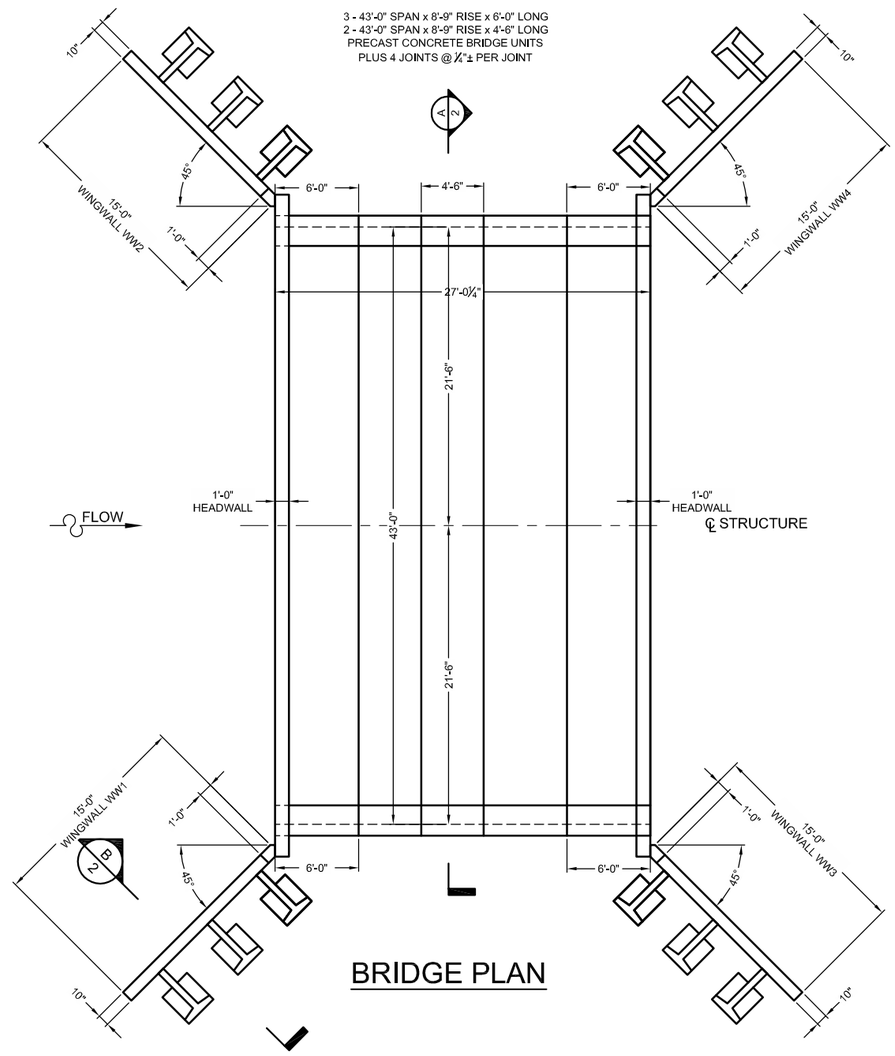

BRIDGE PLAN

The design and information shown on this drawing is provided as a service to the project owner, engineer and contractor by Contech Engineered Solutions LLC ("Contech"). Neither this drawing, nor any part thereof, may be used, reproduced or modified in any manner without the prior written consent of Contech. Failure to comply is done at the user's own risk and Contech expressly disclaims any liability or responsibility for such use.

If discrepancies between the supplied information upon which the drawing is based and actual field conditions are encountered as site work progresses, these discrepancies must be reported to Contech immediately for re-evaluation of the design. Contech accepts no liability for designs based on missing, incomplete or inaccurate information supplied by others.

MARK	DATE	REVISION DESCRIPTION	BY
---		---	--
---		---	--
---		---	--
---		---	--
---		---	--

CONTECH® ENGINEERED SOLUTIONS LLC
www.ContechES.com
11835 NE Glenn Widing Drive, Portland, OR 97220
800-548-4667 503-240-3393 800-561-1271 FAX

CON/SPAN. O-SERIES.

PROPOSAL DRAWING

3000W Badger Creek Bridge
NOT FOR CONSTRUCTION

Tetonia, ID

PROJECT No.:	SEQ. No.:	DATE:
478150	010	4/5/2013
DESIGNED: KKV	DRAWN: N/A	
CHECKED: JL	APPROVED: XXX	
SHEET NO.: 1 OF 5		

C:\DOCUMENTS AND SETTINGS\VOORHEESK\MY DOCUMENTS\PROJECT FILES\IDAHO\CLARK-SE 5334\LEADS\478150 3000W BADGER CREEK\DESIGN\CONTECH\478150 BADGER CREEK C-843 PRELIM 4000 FR REV1 SHT X OF X.DWG 4/12/2013 3:29 PM

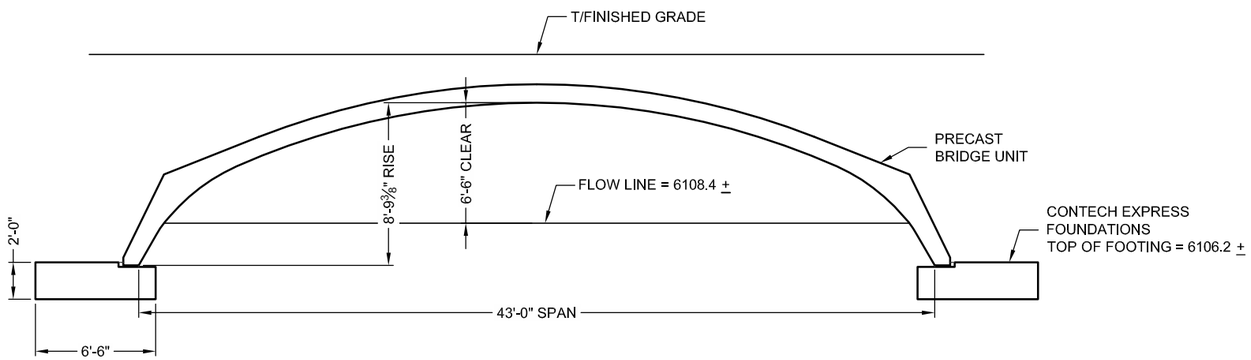

SECTION A/1

0 1' 2' 4'

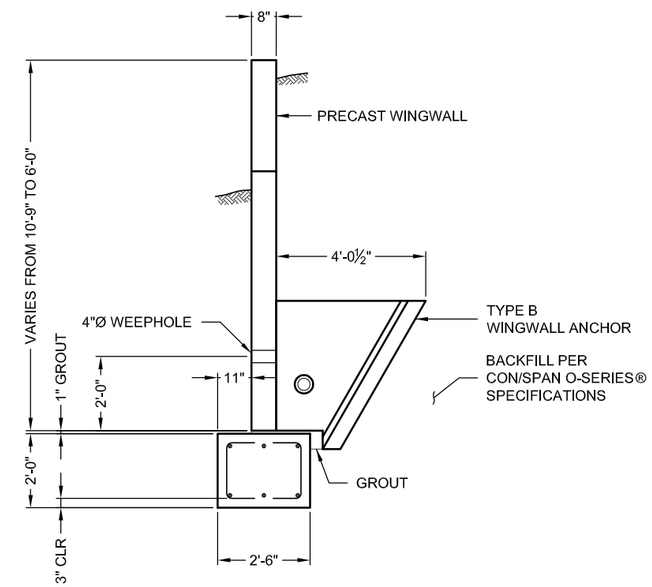

SECTION B/1

0 1' 2' 4'

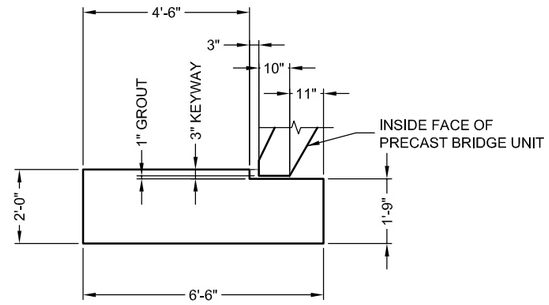

DETAIL C/1

0 1' 2' 4'

The design and information shown on this drawing is provided as a service to the project owner, engineer and contractor by Contech Engineered Solutions LLC ("Contech"). Neither this drawing, nor any part thereof, may be used, reproduced or modified in any manner without the prior written consent of Contech. Failure to comply is done at the user's own risk and Contech expressly disclaims any liability or responsibility for such use.

If discrepancies between the supplied information upon which the drawing is based and actual field conditions are encountered as site work progresses, these discrepancies must be reported to Contech immediately for re-evaluation of the design. Contech accepts no liability for designs based on missing, incomplete or inaccurate information supplied by others.

MARK	DATE	REVISION DESCRIPTION	BY
---		---	--
---		---	--
---		---	--
---		---	--
---		---	--

CONTECH® ENGINEERED SOLUTIONS LLC
www.ContechES.com
11835 NE Glenn Widing Drive, Portland, OR 97220
800-548-4667 503-240-3393 800-561-1271 FAX

CON/SPAN. O-SERIES

PROPOSAL DRAWING

3000W Badger Creek Bridge
NOT FOR CONSTRUCTION

Tetonia, ID

PROJECT No.:	SEQ. No.:	DATE:
478150	010	4/5/2013
DESIGNED: KKV		DRAWN: N/A
CHECKED: JL		APPROVED: XXX
SHEET NO.: 2 OF 5		

C:\DOCUMENTS AND SETTINGS\VOORHEESK\MY DOCUMENTS\PROJECT FILES\IDAHO\CLARK-SE 5334\LEADS\478150 3000W BADGER CREEK\DESIGN\CONTECH\478150 BADGER CREEK O-843 PRELIM 4000 FR REV1 SHT X OF X.DWG 4/12/2013 3:30 PM

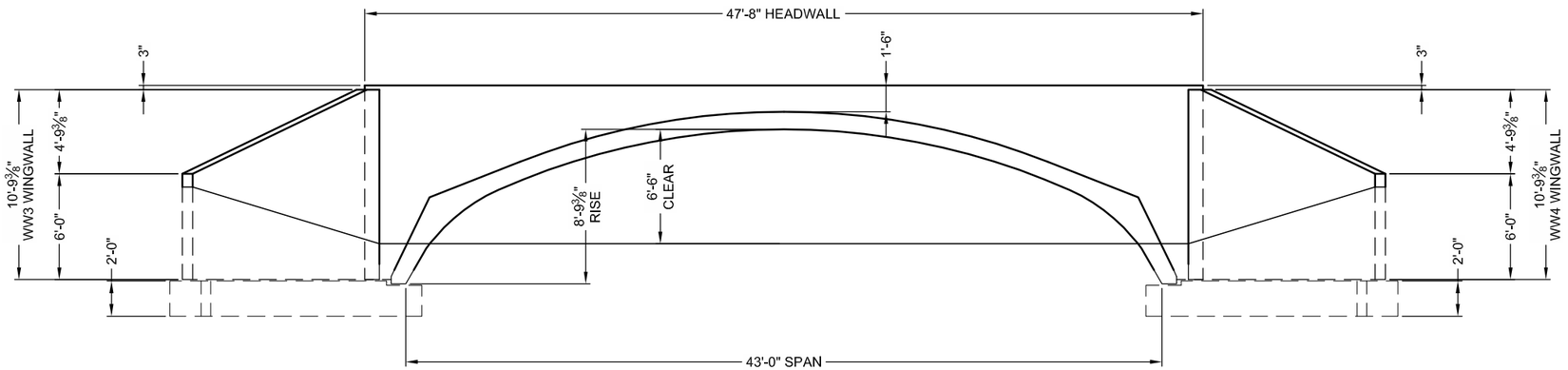

UPSTREAM END ELEVATION

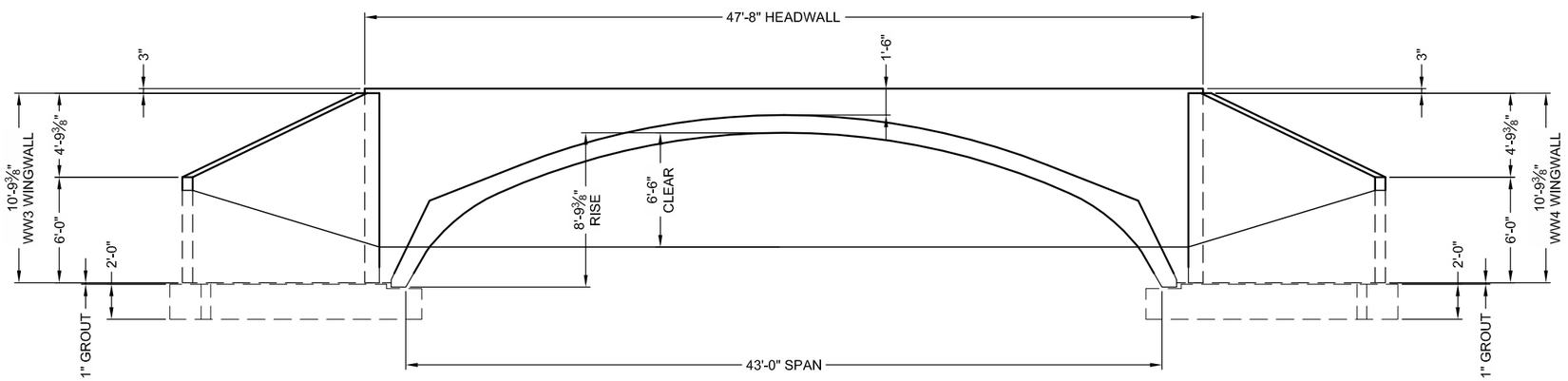

DOWNSTREAM END ELEVATION

C:\DOCUMENTS AND SETTINGS\VOORHEESK\MY DOCUMENTS\PROJECT FILES\IDAHO\CLARK-SE 5334\LEADS\478150 3000W BADGER CREEK\DESIGN\CONTECH\478150 BADGER CREEK O-843 PRELIM 4000 FR REV1 SHT X OF X.DWG 4/12/2013 3:31 PM

The design and information shown on this drawing is provided as a service to the project owner, engineer and contractor by Contech Engineered Solutions LLC ("Contech"). Neither this drawing, nor any part thereof, may be used, reproduced or modified in any manner without the prior written consent of Contech. Failure to comply is done at the user's own risk and Contech expressly disclaims any liability or responsibility for such use.

If discrepancies between the supplied information upon which the drawing is based and actual field conditions are encountered as site work progresses, these discrepancies must be reported to Contech immediately for re-evaluation of the design. Contech accepts no liability for designs based on missing, incomplete or inaccurate information supplied by others.

MARK	DATE	REVISION DESCRIPTION	BY
---		---	--
---		---	--
---		---	--
---		---	--
---		---	--

CONTECH® ENGINEERED SOLUTIONS LLC
www.ContechES.com
11835 NE Glenn Widing Drive, Portland, OR 97220
800-548-4667 503-240-3393 800-561-1271 FAX

CON SPAN. O-SERIES

PROPOSAL DRAWING

3000W Badger Creek Bridge
NOT FOR CONSTRUCTION

Tetonia, ID

PROJECT No.:	SEQ. No.:	DATE:
478150	010	4/5/2013
DESIGNED: KKV	DRAWN: N/A	
CHECKED: JL	APPROVED: XXX	
SHEET NO.: 3 OF 5		

SPECIFICATIONS FOR MANUFACTURE AND INSTALLATION OF CON/SPAN® BRIDGE SYSTEMS

1. DESCRIPTION
   1.1. TYPE - THIS WORK SHALL CONSIST OF FURNISHING AND CONSTRUCTING A CON/SPAN® BRIDGE SYSTEM IN ACCORDANCE WITH THESE SPECIFICATIONS AND IN REASONABLY CLOSE CONFORMITY WITH THE LINES, GRADES, DESIGN AND DIMENSIONS SHOWN ON THE PLANS OR AS ESTABLISHED BY THE ENGINEER. IN SITUATIONS WHERE TWO OR MORE SPECIFICATIONS APPLY TO THIS WORK, THE MOST STRINGENT REQUIREMENTS SHALL GOVERN.
   1.2. DESIGNATION - PRECAST REINFORCED CONCRETE CON/SPAN® BRIDGE UNITS MANUFACTURED IN ACCORDANCE WITH THIS SPECIFICATION SHALL BE DESIGNATED BY SPAN AND RISE. PRECAST REINFORCED CONCRETE WINGWALLS AND HEADWALLS MANUFACTURED IN ACCORDANCE WITH THIS SPECIFICATION SHALL BE DESIGNATED BY LENGTH, HEIGHT, AND DEFLECTION ANGLE.

2. DESIGN
   2.1. SPECIFICATIONS - THE PRECAST ELEMENTS ARE DESIGNED IN ACCORDANCE WITH THE "STANDARD SPECIFICATIONS FOR HIGHWAY BRIDGES" 17TH EDITION, ADOPTED BY THE AMERICAN ASSOCIATION OF STATE HIGHWAY AND TRANSPORTATION OFFICIALS, 2002. A MINIMUM OF ONE FOOT OF COVER ABOVE THE CROWN OF THE BRIDGE UNITS IS REQUIRED IN THE INSTALLED CONDITION. (UNLESS NOTED OTHERWISE ON THE SHOP DRAWINGS AND DESIGNED ACCORDINGLY.)

3. MATERIALS
   3.1. CONCRETE - THE CONCRETE FOR THE PRECAST ELEMENTS SHALL BE AIR-ENTRAINED WHEN INSTALLED IN AREAS SUBJECT TO FREEZE-THAW CONDITIONS, COMPOSED OF PORTLAND CEMENT, FINE AND COARSE AGGREGATES, ADMIXTURES AND WATER. AIR-ENTRAINED CONCRETE SHALL CONTAIN 6 ± 2 PERCENT AIR. THE AIR- ENTRAINING ADMIXTURE SHALL CONFORM TO AASHT0 M154. THE MINIMUM CONCRETE COMPRESSIVE STRENGTH SHALL BE AS SHOWN ON THE SHOP DRAWINGS.
      3.1.1. PORTLAND CEMENT - SHALL CONFORM TO THE REQUIREMENTS OF ASTM SPECIFICATIONS C150-TYPE I, TYPE II, OR TYPE III CEMENT.
      3.1.2. COARSE AGGREGATE - SHALL CONSIST OF STONE HAVING A MAXIMUM SIZE OF 1 INCH. AGGREGATE SHALL MEET REQUIREMENTS FOR ASTM C33.
      3.1.3. WATER REDUCING ADMIXTURE - THE MANUFACTURER MAY SUBMIT, FOR APPROVAL BY THE ENGINEER, A WATER-REDUCING ADMIXTURE FOR THE PURPOSE OF INCREASING WORKABILITY AND REDUCING THE WATER REQUIREMENT FOR THE CONCRETE.
      3.1.4. CALCIUM CHLORIDE - THE ADDITION TO THE MIX OF CALCIUM CHLORIDE OR ADMIXTURES CONTAINING CALCIUM CHLORIDE WILL NOT BE PERMITTED.
      3.1.5. MIXTURE - THE AGGREGATES, CEMENT AND WATER SHALL BE PROPORTIONED AND MIXED IN A BATCH MIXER TO PRODUCE A HOMOGENEOUS CONCRETE MEETING THE STRENGTH REQUIREMENTS OF THIS SPECIFICATION. THE PROPORTION OF PORTLAND CEMENT IN THE MIXTURE SHALL NOT BE LESS THAN 564 POUNDS (6 SACKS) PER CUBIC YARD OF CONCRETE.
   3.2. STEEL REINFORCEMENT
      3.2.1. THE MINIMUM STEEL YIELD STRENGTH SHALL BE 60,000 PSI, UNLESS OTHERWISE NOTED ON THE SHOP DRAWINGS.
      3.2.2. ALL REINFORCING STEEL FOR THE PRECAST ELEMENTS SHALL BE FABRICATED AND PLACED IN ACCORDANCE WITH THE DETAILED SHOP DRAWINGS SUBMITTED BY THE MANUFACTURER.
      3.2.3. REINFORCEMENT SHALL CONSIST OF WELDED WIRE FABRIC CONFORMING TO ASTM SPECIFICATION A 185 OR A 497, OR DEFORMED BILLET STEEL BARS CONFORMING TO ASTM SPECIFICATION A 615, GRADE 60. LONGITUDINAL DISTRIBUTION REINFORCEMENT MAY CONSIST OF WELDED WIRE FABRIC OR DEFORMED BILLET-STEEL BARS.
   3.3. STEEL HARDWARE
      3.3.1. BOLTS AND THREADED RODS FOR WINGWALL CONNECTIONS SHALL CONFORM TO ASTM A 307. NUTS SHALL CONFORM TO AASHTO M292 (ASTM A194) GRADE 2H. ALL BOLTS, THREADED RODS AND NUTS USED IN WINGWALL CONNECTIONS SHALL BE MECHANICALLY ZINC COATED IN ACCORDANCE WITH ASTM B695 CLASS 50.
      3.3.2. STRUCTURAL STEEL FOR WINGWALL CONNECTION PLATES AND PLATE WASHERS SHALL CONFORM TO AASHTO M 270 (ASTM A 709) GRADE 36 AND SHALL BE HOT DIP GALVANIZED AS PER AASHTO M111 (ASTM A123).
      3.3.3. INSERTS FOR WINGWALLS SHALL BE 1" DIAMETER TWO-BOLT PRESET WINGWALL ANCHORS AS MANUFACTURED BY DAYTON/RICHMOND CONCRETE ACCESSORIES, MIAMISBURG, OHIO, (800) 745-3700.
      3.3.4. FERRULE LOOP INSERTS SHALL BE F-64 FERRULE LOOP INSERTS AS MANUFACTURED BY DAYTON/RICHMOND CONCRETE ACCESSORIES, MIAMISBURG, OHIO, (800) 745-3700.
      3.3.5. HOOK BOLTS USED IN ATTACHED HEADWALL CONNECTIONS SHALL BE ASTM A307.
      3.3.6. INSERTS FOR DETACHED HEADWALL CONNECTIONS SHALL BE AISI TYPE 304 STAINLESS STEEL, F-58 EXPANDED COIL INSERTS AS MANUFACTURED BY DAYTON/RICHMOND CONCRETE ACCESSORIES, MIAMISBURG, OHIO, (800) 745-3700. COIL RODS AND NUTS USED IN HEADWALL CONNECTIONS SHALL BE AISI TYPE 304 STAINLESS STEEL. WASHERS USED IN HEADWALL CONNECTIONS SHALL BE EITHER AISI TYPE 304 STAINLESS STEEL PLATE WASHERS OR AASHTO M270 (ASTM A709) GRADE 36 PLATE WASHERS HOT DIP GALVANIZED AS PER AASHTO M111 (ASTM A123).
      3.3.7. REINFORCING BAR SPLICES SHALL BE MADE USING THE DOWEL BAR SPLICER SYSTEM AS MANUFACTURED BY DAYTON/RICHMOND CONCRETE ACCESSORIES, MIAMISBURG, OHIO, (800) 745-3700, AND SHALL CONSIST OF THE DOWEL BAR SPLICER (DB-SAE) AND DOWEL-IN (DI).

4. MANUFACTURE OF PRECAST ELEMENTS - SUBJECT TO THE PROVISIONS OF SECTION 5, BELOW, THE PRECAST ELEMENT DIMENSION AND REINFORCEMENT DETAILS SHALL BE AS PRESCRIBED IN THE PLAN AND SHOP DRAWINGS PROVIDED BY THE MANUFACTURER.
   4.1. FORMS - THE FORMS USED IN MANUFACTURE SHALL BE SUFFICIENTLY RIGID AND ACCURATE TO MAINTAIN THE REQUIRED PRECAST ELEMENT DIMENSIONS WITHIN THE PERMISSIBLE VARIATIONS GIVEN IN SECTION 5 OF THESE SPECIFICATIONS. ALL CASTING SURFACES SHALL BE OF A SMOOTH MATERIAL.
   4.2. PLACEMENT OF REINFORCEMENT
      4.2.1. PLACEMENT OF REINFORCEMENT IN PRECAST BRIDGE UNITS - THE COVER OF CONCRETE OVER THE OUTSIDE CIRCUMFERENTIAL REINFORCEMENT SHALL BE 2" MINIMUM. THE COVER OF CONCRETE OVER THE INSIDE CIRCUMFERENTIAL REINFORCEMENT SHALL BE 1½" MINIMUM, UNLESS OTHERWISE NOTED ON THE SHOP DRAWINGS. THE CLEAR DISTANCE OF THE END CIRCUMFERENTIAL WIRES SHALL NOT BE LESS THAN 1" NOR MORE THAN 2" FROM THE ENDS OF EACH SECTION. REINFORCEMENT SHALL BE ASSEMBLED UTILIZING SINGLE OR MULTIPLE LAYERS OF WELDED WIRE FABRIC (NOT TO EXCEED 3 LAYERS), SUPPLEMENTED WITH A SINGLE LAYER OF DEFORMED BILLET-STEEL BARS, WHEN NECESSARY. WELDED WIRE FABRIC SHALL BE COMPOSED OF CIRCUMFERENTIAL AND LONGITUDINAL WIRES MEETING THE SPACING REQUIREMENTS OF 4.3, BELOW, AND SHALL CONTAIN SUFFICIENT LONGITUDINAL WIRES EXTENDING THROUGH THE BRIDGE UNIT TO MAINTAIN THE SHAPE AND POSITION OF THE REINFORCEMENT. LONGITUDINAL DISTRIBUTION REINFORCEMENT MAY BE WELDED WIRE FABRIC OR DEFORMED BILLET-STEEL BARS AND SHALL MEET THE SPACING REQUIREMENTS OF 4.3, BELOW. THE ENDS OF THE LONGITUDINAL DISTRIBUTION REINFORCEMENT SHALL BE NOT MORE THAN 3" AND NOT LESS THAN 1½" FROM THE ENDS OF THE BRIDGE UNIT.
      4.2.2. BENDING OF REINFORCEMENT FOR PRECAST BRIDGE UNITS - THE OUTSIDE AND INSIDE CIRCUMFERENTIAL REINFORCING STEEL FOR THE CORNERS OF THE BRIDGE SHALL BE BENT TO SUCH AN ANGLE THAT IS APPROXIMATELY EQUAL TO THE CONFIGURATION OF THE BRIDGE'S OUTSIDE CORNER.
      4.2.3. PLACEMENT OF REINFORCEMENT FOR PRECAST WINGWALLS AND HEADWALLS - THE COVER OF CONCRETE OVER THE LONGITUDINAL AND TRANSVERSE REINFORCEMENT SHALL BE 2" MINIMUM. THE CLEAR DISTANCE FROM THE END OF EACH PRECAST ELEMENT TO THE END OF REINFORCING STEEL SHALL NOT BE LESS THAN 1½" NOR MORE THAN 3". REINFORCEMENT SHALL BE ASSEMBLED UTILIZING A SINGLE LAYER OF WELDED WIRE FABRIC, OR A SINGLE LAYER OF DEFORMED BILLET-STEEL BARS. WELDED WIRE FABRIC SHALL BE COMPOSED OF TRANSVERSE AND LONGITUDINAL WIRES MEETING THE SPACING REQUIREMENTS OF 4.3, BELOW, AND SHALL CONTAIN SUFFICIENT LONGITUDINAL WIRES EXTENDING THROUGH THE ELEMENT TO MAINTAIN THE SHAPE AND POSITION OF THE REINFORCEMENT. LONGITUDINAL REINFORCEMENT MAY BE WELDED WIRE FABRIC OR DEFORMED BILLET-STEEL BARS AND SHALL MEET THE SPACING REQUIREMENTS OF 4.3, BELOW.
   4.3. LAPS, WELDS, SPACING
      4.3.1. LAPS, WELDS, AND SPACING FOR PRECAST BRIDGE UNITS - TENSION SPLICES IN THE CIRCUMFERENTIAL REINFORCEMENT SHALL BE MADE BY LAPPING. LAPS MAY BE TACK WELDED TOGETHER FOR ASSEMBLY PURPOSES. FOR SMOOTH WELDED WIRE FABRIC, THE OVERLAP SHALL MEET THE REQUIREMENTS OF AASHTO 8.30.2 AND 8.32.6. FOR DEFORMED WELDED WIRE FABRIC, THE OVERLAP SHALL MEET THE REQUIREMENTS OF AASHTO 8.30.1 AND 8.32.5. THE OVERLAP OF WELDED WIRE FABRIC SHALL BE MEASURED BETWEEN THE OUTER-MOST LONGITUDINAL WIRES OF EACH FABRIC SHEET. FOR DEFORMED BILLET-STEEL BARS, THE OVERLAP SHALL MEET THE REQUIREMENTS OF AASHTO 8.25. FOR SPLICES OTHER THAN TENSION SPLICES, THE OVERLAP SHALL BE A MINIMUM OF 1'-0" FOR WELDED WIRE FABRIC OR DEFORMED BILLET-STEEL BARS. THE SPACING CENTER TO CENTER OF THE CIRCUMFERENTIAL WIRES IN A WIRE FABRIC SHEET SHALL BE NOT LESS THAN 2" NOR MORE THAN 4". THE SPACING CENTER TO CENTER OF THE LONGITUDINAL WIRES SHALL NOT BE MORE THAN 8". THE SPACING CENTER TO CENTER OF THE LONGITUDINAL DISTRIBUTION STEEL FOR EITHER LINE OF REINFORCING IN THE TOP SLAB SHALL BE NOT MORE THAN 1'-4".
      4.3.2. LAPS, WELDS, AND SPACING FOR PRECAST WINGWALLS AND HEADWALLS - SPLICES IN THE REINFORCEMENT SHALL BE MADE BY LAPPING. LAPS MAY BE TACK WELDED TOGETHER FOR ASSEMBLY PURPOSES. FOR SMOOTH WELDED WIRE FABRIC, THE OVERLAP SHALL MEET THE REQUIREMENTS OF AASHTO 8.30.2 AND 8.32.6. FOR DEFORMED WELDED WIRE FABRIC, THE OVERLAP SHALL MEET THE REQUIREMENTS OF AASHTO 8.30.1 AND 8.32.5. FOR DEFORMED BILLET-STEEL BARS, THE OVERLAP SHALL MEET THE REQUIREMENTS OF AASHTO 8.25. THE SPACING CENTER-TO-CENTER OF THE WIRES IN A WIRE FABRIC SHEET SHALL BE NOT LESS THAN 2" NOR MORE THAN 8".
   4.4. CURING - THE PRECAST CONCRETE ELEMENTS SHALL BE CURED FOR A SUFFICIENT LENGTH OF TIME SO THAT THE CONCRETE WILL DEVELOP THE SPECIFIED COMPRESSIVE STRENGTH IN 28 DAYS OR LESS. ANY ONE OF THE FOLLOWING METHODS OF CURING OR COMBINATIONS THERE OF SHALL BE USED:
      4.4.1. STEAM CURING - THE PRECAST ELEMENTS MAY BE LOW-PRESSURE STEAM CURED BY A SYSTEM THAT WILL MAINTAIN A MOIST ATMOSPHERE.
      4.4.2. WATER CURING - THE PRECAST ELEMENTS MAY BE WATER CURED BY ANY METHOD THAT WILL KEEP THE SECTIONS MOIST.
      4.4.3. MEMBRANE CURING - A SEALING MEMBRANE CONFORMING TO THE REQUIREMENTS OF ASTM SPECIFICATION C309 MAY BE APPLIED AND SHALL BE LEFT INTACT UNTIL THE REQUIRED CONCRETE COMPRESSIVE STRENGTH IS ATTAINED. THE CONCRETE TEMPERATURE AT THE TIME OF STRENGTH IS ATTAINED. THE CONCRETE TEMPERATURE AT THE TIME OF APPLICATION SHALL BE WITHIN +/- 10 DEGREES F OF THE ATMOSPHERIC TEMPERATURE. ALL SURFACES SHALL BE KEPT MOIST PRIOR TO THE APPLICATION OF THE COMPOUNDS AND SHALL BE DAMP WHEN THE COMPOUND IS APPLIED.
   4.5. STORAGE, HANDLING & DELIVERY
      4.5.1. STORAGE - PRECAST CONCRETE BRIDGE ELEMENTS SHALL BE LIFTED AND STORED IN "AS-CAST" POSITION. PRECAST CONCRETE HEADWALL AND WINGWALL UNITS ARE CAST, STORED AND SHIPPED IN A FLAT POSITION. THE PRECAST ELEMENTS SHALL BE STORED IN SUCH A MANNER TO PREVENT CRACKING OR DAMAGE. STORE ELEMENTS USING TIMBER SUPPORTS AS APPROPRIATE. THE UNITS SHALL NOT BE MOVED UNTIL THE CONCRETE COMPRESSIVE STRENGTH HAS REACHED A MINIMUM OF 2500 PSI, AND THEY SHALL NOT BE STORED IN AN UPRIGHT POSITION.
      4.5.2. HANDLING - HANDLING DEVICES SHALL BE PERMITTED IN EACH PRECAST ELEMENT FOR THE PURPOSE OF HANDLING AND SETTING. SPREADER BEAMS MAY BE REQUIRED FOR THE LIFTING OF PRECAST CONCRETE BRIDGE ELEMENTS TO PRECLUDE DAMAGE FROM BENDING OR TORSION FORCES.
      4.5.3. DELIVERY - PRECAST CONCRETE ELEMENTS MUST NOT BE SHIPPED UNTIL THE CONCRETE HAS ATTAINED THE SPECIFIED DESIGN COMPRESSIVE STRENGTH, OR AS DIRECTED BY THE DESIGN ENGINEER. PRECAST CONCRETE ELEMENTS MAY BE UNLOADED AND PLACED ON THE GROUND AT THE SITE UNTIL INSTALLED. STORE ELEMENTS USING TIMBER SUPPORTS AS APPROPRIATE.
   4.6. QUALITY ASSURANCE - THE PRECASTER SHALL DEMONSTRATE ADHERENCE TO THE STANDARDS SET FORTH IN THE NPCA QUALITY CONTROL MANUAL. THE PRECASTER SHALL MEET EITHER SECTION 4.6.1 OR 4.6.2
      4.6.1. CERTIFICATION - THE PRECASTER SHALL BE CERTIFIED BY THE PRECAST/PRESTRESSED CONCRETE INSTITUTE PLANT CERTIFICATION PROGRAM OR THE NATIONAL PRECAST CONCRETE ASSOCIATION'S PLANT CERTIFICATION PROGRAM PRIOR TO AND DURING PRODUCTION OF THE PRODUCTS COVERED BY THIS SPECIFICATION.
      4.6.2. QUALIFICATIONS, TESTING AND INSPECTION
         4.6.2.1. THE PRECASTER SHALL HAVE BEEN IN THE BUSINESS OF PRODUCING PRECAST CONCRETE PRODUCTS SIMILAR TO THOSE SPECIFIED FOR A MINIMUM OF THREE YEARS. HE SHALL MAINTAIN A PERMANENT QUALITY CONTROL DEPARTMENT OR RETAIN AN INDEPENDENT TESTING AGENCY ON A CONTINUING BASIS. THE AGENCY SHALL ISSUE A REPORT, CERTIFIED BY A LICENSED ENGINEER, DETAILING THE ABILITY OF THE PRECASTER TO PRODUCE QUALITY PRODUCTS CONSISTENT WITH INDUSTRY STANDARDS.
         4.6.2.2. THE PRECASTER SHALL SHOW THAT THE FOLLOWING TESTS ARE PERFORMED IN ACCORDANCE WITH THE ASTM STANDARDS INDICATED. TESTS SHALL BE PERFORMED AS INDICATED IN SECTION 6 OF THESE SPECIFICATIONS.
            4.6.2.2.1. AIR CONTENT: C231 OR C173
            4.6.2.2.2. COMPRESSIVE STRENGTH: C31,C39,C497
         4.6.2.3. THE PRECASTER SHALL PROVIDE DOCUMENTATION DEMONSTRATING COMPLIANCE WITH THIS SECTION TO CONTECH® BRIDGE SOLUTIONS AT REGULAR INTERVALS OR UPON REQUEST.
         4.6.2.4. THE OWNER MAY PLACE AN INSPECTOR IN THE PLANT WHEN THE PRODUCTS COVERED BY THIS SPECIFICATION ARE BEING MANUFACTURED.
      4.6.3. DOCUMENTATION - THE PRECASTER SHALL SUBMIT PRECAST PRODUCTION REPORTS TO CONTECH® BRIDGE SOLUTIONS AS REQUIRED.

5. PERMISSIBLE VARIATIONS
   5.1. BRIDGE UNITS
      5.1.1. INTERNAL DIMENSIONS - THE INTERNAL DIMENSION SHALL VARY NOT MORE THAN 1% FROM THE DESIGN DIMENSIONS NOR MORE THAN 1½" WHICHEVER IS LESS.
      5.1.2. SLAB AND WALL THICKNESS - THE SLAB AND WALL THICKNESS SHALL NOT BE LESS THAN THAT SHOWN IN THE DESIGN BY MORE THAN ¼". A THICKNESS MORE THAN THAT REQUIRED IN THE DESIGN SHALL NOT BE CAUSE FOR REJECTION.
      5.1.3. LENGTH OF OPPOSITE SURFACES - VARIATIONS IN LAYING LENGTHS OF TWO OPPOSITE SURFACES OF THE BRIDGE UNIT SHALL NOT BE MORE THAN ½" IN ANY SECTION, EXCEPT WHERE BEVELED ENDS FOR LAYING OF CURVES ARE SPECIFIED BY THE PURCHASER.
      5.1.4. LENGTH OF SECTION - THE UNDERRUN IN LENGTH OF A SECTION SHALL NOT BE MORE THAN ½" IN ANY BRIDGE UNIT.
      5.1.5. POSITION OF REINFORCEMENT - THE MAXIMUM VARIATION IN POSITION OF THE REINFORCEMENT SHALL BE ± ½". IN NO CASE SHALL THE COVER OVER THE REINFORCEMENT BE LESS THAN 1½" FOR THE OUTSIDE CIRCUMFERENTIAL STEEL OR BE LESS THAN 1" FOR THE INSIDE CIRCUMFERENTIAL STEEL AS MEASURED TO THE EXTERNAL OR INTERNAL SURFACE OF THE BRIDGE. THESE TOLERANCES OR COVER REQUIREMENTS DO NOT APPLY TO MATING SURFACES OF THE JOINTS.
      5.1.6. AREA OF REINFORCEMENT - THE AREAS OF STEEL REINFORCEMENT SHALL BE THE DESIGN STEEL AREAS AS SHOWN IN THE MANUFACTURER'S SHOP DRAWINGS. STEEL AREAS GREATER THAN THOSE REQUIRED SHALL NOT BE CAUSE FOR REJECTION. THE PERMISSIBLE VARIATION IN DIAMETER OF ANY REINFORCEMENT SHALL CONFORM TO THE TOLERANCES PRESCRIBED IN THE ASTM SPECIFICATION FOR THAT TYPE OF REINFORCEMENT.
   5.2. WINGWALLS & HEADWALLS
      5.2.1. WALL THICKNESS - THE WALL THICKNESS SHALL NOT VARY FROM THAT SHOWN IN THE DESIGN BY MORE THAN ½".
      5.2.2. LENGTH/HEIGHT OF WALL SECTIONS - THE LENGTH AND HEIGHT OF THE WALL SHALL NOT VARY FROM THAT SHOWN IN THE DESIGN BY MORE THAN ½".
      5.2.3. POSITION OF REINFORCEMENT - THE MAXIMUM VARIATION IN THE POSITION OF THE REINFORCEMENT SHALL BE ± ½". IN NO CASE SHALL THE COVER OVER THE REINFORCEMENT BE LESS THAN 1½".
      5.2.4. SIZE OF REINFORCEMENT - THE PERMISSIBLE VARIATION IN DIAMETER OF ANY REINFORCING SHALL CONFORM TO THE TOLERANCES PRESCRIBED IN THE ASTM SPECIFICATION FOR THAT TYPE OF REINFORCING. STEEL AREA GREATER THAN THAT REQUIRED SHALL NOT BE CAUSE FOR REJECTION.

6. TESTING/ INSPECTION
   6.1. TESTING
      6.1.1. TYPE OF TEST SPECIMEN - CONCRETE COMPRESSIVE STRENGTH SHALL BE DETERMINED FROM COMPRESSION TESTS MADE ON CYLINDERS OR CORES. FOR CYLINDER TESTING, A MINIMUM OF 4 CYLINDERS SHALL BE TAKEN FOR EACH BRIDGE ELEMENT. EACH ELEMENT SHALL BE CONSIDERED SEPARATELY FOR THE PURPOSE OF TESTING AND ACCEPTANCE.
      6.1.2. COMPRESSION TESTING - CYLINDERS SHALL BE MADE AND TESTED AS PRESCRIBED BY THE ASTM C39 SPECIFICATION. CYLINDERS SHALL BE CURED IN THE SAME ENVIRONMENT AS THE BRIDGE ELEMENTS. CORES SHALL BE OBTAINED AND TESTED FOR COMPRESSIVE STRENGTH IN ACCORDANCE WITH THE PROVISIONS OF THE ASTM C42 SPECIFICATION.
      6.1.3. ACCEPTABILITY OF CYLINDER TESTS - WHEN THE AVERAGE COMPRESSIVE STRENGTH OF ALL CYLINDERS TESTED IS EQUAL TO OR GREATER THAN THE DESIGN COMPRESSIVE STRENGTH, AND NOT MORE THAN 10% OF THE CYLINDERS TESTED HAVE A COMPRESSIVE STRENGTH LESS THAN THE DESIGN CONCRETE STRENGTH, AND NO CYLINDER TESTED HAS A COMPRESSIVE STRENGTH LESS THAN 80% OF THE DESIGN COMPRESSIVE STRENGTH, THEN THE ELEMENT SHALL BE ACCEPTED. WHEN THE COMPRESSIVE STRENGTH OF THE CYLINDERS TESTED DOES NOT CONFORM TO THESE ACCEPTANCE CRITERIA, THE ACCEPTABILITY OF THE ELEMENT MAY BE DETERMINED AS DESCRIBED IN SECTION 6.1.4, BELOW.
      6.1.4. ACCEPTABILITY OF CORE TESTS - THE COMPRESSIVE STRENGTH OF THE CONCRETE IN A BRIDGE ELEMENT IS ACCEPTABLE WHEN THE AVERAGE CORE TEST STRENGTH IS EQUAL TO OR GREATER THAN THE DESIGN CONCRETE STRENGTH. WHEN THE COMPRESSIVE STRENGTH OF A CORE TESTED IS LESS THAN THE DESIGN CONCRETE STRENGTH, THE PRECAST ELEMENT FROM WHICH THAT CORE WAS TAKEN MAY BE RE-CORED. WHEN THE COMPRESSIVE STRENGTH OF THE RE-CORE IS EQUAL TO OR GREATER THAN THE DESIGN CONCRETE STRENGTH, THE COMPRESSIVE STRENGTH OF THE CONCRETE IN THAT BRIDGE ELEMENT IS ACCEPTABLE.
         6.1.4.1. WHEN THE COMPRESSIVE STRENGTH OF ANY RECORE IS LESS THAN THE DESIGN CONCRETE STRENGTH, THE PRECAST ELEMENT FROM WHICH THAT CORE WAS TAKEN SHALL BE REJECTED.
         6.1.4.2. PLUGGING CORE HOLES - THE CORE HOLES SHALL BE PLUGGED AND SEALED BY THE MANUFACTURER IN A MANNER SUCH THAT THE ELEMENTS WILL MEET ALL OF THE TEST REQUIREMENTS OF THIS SPECIFICATION. PRECAST ELEMENTS SO SEALED SHALL BE CONSIDERED SATISFACTORY FOR USE.
         6.1.4.3. TEST EQUIPMENT - EVERY MANUFACTURER FURNISHING PRECAST ELEMENTS UNDER THIS SPECIFICATION SHALL FURNISH ALL FACILITIES AND PERSONNEL NECESSARY TO CARRY OUT THE TEST REQUIRED.
   6.2. INSPECTION - THE QUALITY OF MATERIALS, THE PROCESS OF MANUFACTURE, AND THE FINISHED PRECAST ELEMENTS SHALL BE SUBJECT TO INSPECTION BY THE PURCHASER.

7. JOINTS
   THE BRIDGE UNITS SHALL BE PRODUCED WITH FLAT BUTT ENDS. THE ENDS OF THE BRIDGE UNITS SHALL BE SUCH THAT WHEN THE SECTIONS ARE LAID TOGETHER THEY WILL MAKE A CONTINUOUS LINE WITH A SMOOTH INTERIOR FREE OF APPRECIABLE IRREGULARITIES, ALL COMPATIBLE WITH THE PERMISSIBLE VARIATIONS IN SECTION 5, ABOVE. THE JOINT WIDTH BETWEEN ADJACENT PRECAST UNITS SHALL NOT EXCEED ¾".

8. WORKMANSHIP/ FINISH
   THE BRIDGE UNITS, WINGWALLS, AND HEADWALLS SHALL BE SUBSTANTIALLY FREE OF FRACTURES. THE ENDS OF THE BRIDGE UNITS SHALL BE NORMAL TO THE WALLS AND CENTERLINE OF THE BRIDGE SECTION, WITHIN THE LIMITS OF THE VARIATIONS GIVEN IN SECTION 5, ABOVE, EXCEPT WHERE BEVELED ENDS ARE SPECIFIED. THE FACES OF THE WINGWALLS AND HEADWALLS SHALL BE PARALLEL TO EACH OTHER, WITHIN THE LIMITS OF VARIATIONS GIVEN IN SECTION 5, ABOVE. THE SURFACE OF THE PRECAST ELEMENTS SHALL BE A SMOOTH STEEL FORM OR TROWELED SURFACE. TRAPPED AIR POCKETS CAUSING SURFACE DEFECTS SHALL BE CONSIDERED AS PART OF A SMOOTH, STEEL FORM FINISH.

9. REPAIRS
   PRECAST ELEMENTS MAY BE REPAIRED, IF NECESSARY, BECAUSE OF IMPERFECTIONS IN MANUFACTURE OR HANDLING DAMAGE AND WILL BE ACCEPTABLE IF, IN THE OPINION OF THE PURCHASER, THE REPAIRS ARE SOUND, PROPERLY FINISHED AND CURED, AND THE REPAIRED SECTION CONFORMS TO THE REQUIREMENTS OF THIS SPECIFICATION.

10. REJECTION
   THE PRECAST ELEMENTS SHALL BE SUBJECT TO REJECTION ON ACCOUNT OF ANY OF THE SPECIFICATION REQUIREMENTS. INDIVIDUAL PRECAST ELEMENTS MAY BE REJECTED BECAUSE OF ANY OF THE FOLLOWING:
   10.1. FRACTURES OR CRACKS PASSING THROUGH THE WALL, EXCEPT FOR A SINGLE END CRACK THAT DOES NOT EXCEED ONE HALF THE THICKNESS OF THE WALL.
   10.2. DEFECTS THAT INDICATE PROPORTIONING, MIXING, AND MOLDING NOT IN COMPLIANCE WITH SECTION 4 OF THESE SPECIFICATIONS.
   10.3. HONEYCOMBED OR OPEN TEXTURE.
   10.4. DAMAGED ENDS, WHERE SUCH DAMAGE WOULD PREVENT MAKING A SATISFACTORY JOINT.

11. MARKING
   EACH BRIDGE UNIT SHALL BE CLEARLY MARKED BY WATERPROOF PAINT. THE FOLLOWING SHALL BE SHOWN ON THE INSIDE OF THE VERTICAL LEG OF THE BRIDGE SECTION:
   BRIDGE SPAN x BRIDGE RISE
   DATE OF MANUFACTURE
   NAME OR TRADEMARK OF THE MANUFACTURER

The design and information shown on this drawing is provided as a service to the project owner, engineer and contractor by Contech Engineered Solutions LLC ("Contech"). Neither this drawing, nor any part thereof, may be used, reproduced or modified in any manner without the prior written consent of Contech. Failure to comply is done at the user's own risk and Contech expressly disclaims any liability or responsibility for such use.

If discrepancies between the supplied information upon which the drawing is based and actual field conditions are encountered as site work progresses, these discrepancies must be reported to Contech immediately for re-evaluation of the design. Contech accepts no liability for designs based on missing, incomplete or inaccurate information supplied by others.

MARK	DATE	REVISION DESCRIPTION	BY
---		---	---
---		---	---
---		---	---
---		---	---
---		---	---

CONTECH® ENGINEERED SOLUTIONS LLC
www.ContechES.com
11835 NE Glenn Widing Drive, Portland, OR 97220
800-548-4667 503-240-3393 800-561-1271 FAX

CON/SPAN. Q-SERIES.

PROPOSAL DRAWING

3000W Badger Creek Bridge
NOT FOR CONSTRUCTION

Tetonia, ID

PROJECT No.:	SEQ. No.:	DATE:
478150	010	4/5/2013
DESIGNED: KKV	DRAWN: N/A	
CHECKED: JL	APPROVED: XXX	
SHEET NO.: 4 OF 5		

C:\DOCUMENTS AND SETTINGS\VOORHEES\KMY DOCUMENTS\PROJECT FILES\IDAHO\CLARK-SE 5334\LEADS\478150 3000W BADGER CREEK\DESIGN\CONTECH\478150 BADGER CREEK C-843 PRELIM 4000 FR REV1 SHT X OF X.DWG 4/12/2013 3:32 PM

SPECIFICATIONS FOR MANUFACTURE AND INSTALLATION OF CON/SPAN® BRIDGE SYSTEMS (CONT'D)

12. INSTALLATION PREPARATION
TO ENSURE CORRECT INSTALLATION OF THE PRECAST CONCRETE BRIDGE SYSTEM, CARE AND CAUTION MUST BE EXERCISED IN FORMING THE SUPPORT AREAS FOR BRIDGE UNITS, HEADWALL, AND WINGWALL ELEMENTS. EXERCISING SPECIAL CARE WILL FACILITATE THE RAPID INSTALLATION OF THE PRECAST COMPONENTS.

12.1. FOOTINGS
DO NOT OVER EXCAVATE FOUNDATIONS UNLESS DIRECTED BY SITE SOIL ENGINEER TO REMOVE UNSUITABLE SOIL.

THE SITE SOILS ENGINEER SHALL CERTIFY THAT THE BEARING CAPACITY MEETS OR EXCEEDS THE FOOTING DESIGN REQUIREMENTS, PRIOR TO THE CONTRACTOR POURING OF THE FOOTINGS.

THE BRIDGE UNITS AND WINGWALLS SHALL BE INSTALLED ON EITHER PRECAST OR CAST-IN-PLACE CONCRETE FOOTINGS. THE SIZE AND ELEVATION OF THE FOOTINGS SHALL BE AS DESIGNED BY THE ENGINEER. A KEYWAY SHALL BE FORMED IN THE TOP SURFACE OF THE BRIDGE FOOTING AS SPECIFIED ON THE PLANS. NO KEYWAY IS REQUIRED IN THE WINGWALL FOOTINGS, UNLESS OTHERWISE SPECIFIED ON THE PLANS.

THE FOOTINGS SHALL BE GIVEN A SMOOTH FLOAT FINISH AND SHALL REACH A COMPRESSIVE STRENGTH OF 2,000 PSI BEFORE PLACEMENT OF THE BRIDGE AND WINGWALL ELEMENTS. BACKFILLING SHALL NOT BEGIN UNTIL THE FOOTING HAS REACHED THE FULL DESIGN COMPRESSIVE STRENGTH.

THE FOOTING SURFACE SHALL BE CONSTRUCTED IN ACCORDANCE WITH GRADES SHOWN ON THE PLANS. WHEN TESTED WITH A 10'-0" STRAIGHT EDGE, THE SURFACE SHALL NOT VARY MORE THAN ¼" IN 10'-0".

IF A PRECAST CONCRETE FOOTING IS USED, THE CONTRACTOR SHALL PREPARE A 4" THICK BASE LAYER OF COMPACTED GRANULAR MATERIAL THE FULL WIDTH OF THE FOOTING PRIOR TO PLACING THE PRECAST FOOTING.

THE FOUNDATIONS FOR PRECAST CONCRETE BRIDGE ELEMENTS AND WINGWALLS MUST BE CONNECTED BY REINFORCEMENT TO FORM ONE MONOLITHIC BODY. EXPANSION JOINTS SHALL NOT BE USED.

THE CONTRACTOR SHALL BE RESPONSIBLE FOR THE CONSTRUCTION OF THE FOUNDATIONS PER THE PLANS AND SPECIFICATIONS.

13. INSTALLATION
13.1. GENERAL - THE INSTALLATION OF THE PRECAST CONCRETE ELEMENTS SHALL BE AS EXPLAINED IN THE PUBLICATION CON/SPAN BRIDGE SYSTEMS INSTALLATION HANDBOOK.
13.1.1. LIFTING - IT IS THE RESPONSIBILITY OF THE CONTRACTOR TO ENSURE THAT A CRANE OF THE CORRECT LIFTING CAPACITY IS AVAILABLE TO HANDLE THE PRECAST CONCRETE UNITS. THIS CAN BE ACCOMPLISHED BY USING THE WEIGHTS GIVEN FOR THE PRECAST CONCRETE COMPONENTS AND BY DETERMINING THE LIFTING REACH FOR EACH CRANE UNIT. SITE CONDITIONS MUST BE CHECKED WELL IN ADVANCE OF SHIPPING TO ENSURE PROPER CRANE LOCATION AND TO AVOID ANY LIFTING RESTRICTIONS. THE LIFT ANCHORS OR HOLES PROVIDED IN EACH UNIT ARE THE ONLY MEANS TO BE USED TO LIFT THE ELEMENTS. THE PRECAST CONCRETE ELEMENTS MUST NOT BE SUPPORTED OR RAISED BY OTHER MEANS THAN THOSE GIVEN IN THE MANUALS AND DRAWINGS WITHOUT WRITTEN APPROVAL FROM CONTECH® BRIDGE SOLUTIONS.
13.1.2. CONSTRUCTION EQUIPMENT WEIGHT RESTRICTIONS - IN NO CASE SHALL EQUIPMENT OPERATING IN EXCESS OF THE DESIGN LOAD (HS20 OR HS25) BE PERMITTED OVER THE BRIDGE UNITS UNLESS APPROVED BY CONTECH® BRIDGE SOLUTIONS.
13.1.2.1. IN THE IMMEDIATE AREA OF THE BRIDGE UNITS, THE FOLLOWING RESTRICTIONS FOR THE USE OF HEAVY CONSTRUCTION MACHINERY DURING BACKFILLING OPERATIONS APPLY:
NO CONSTRUCTION EQUIPMENT SHALL CROSS THE BARE
- PRECAST CONCRETE BRIDGE UNIT.
AFTER THE COMPACTED FILL LEVEL HAS REACHED A MINIMUM OF
- 4" OVER THE CROWN OF THE BRIDGE, CONSTRUCTION EQUIPMENT WITH A WEIGHT OF LESS THAN 10 TONS MAY CROSS THE BRIDGE.
AFTER THE COMPACTED FILL LEVEL HAS REACHED A MINIMUM OF
- 1'-0" OVER THE CROWN OF THE BRIDGE, CONSTRUCTION EQUIPMENT WITH A WEIGHT OF LESS THAN 30 TONS MAY CROSS THE BRIDGE.
AFTER THE COMPACTED FILL LEVEL HAS REACHED THE DESIGN
- COVER, OR 2'-0" MINIMUM, OVER THE CROWN OF THE PRECAST CONCRETE BRIDGE, CONSTRUCTION EQUIPMENT WITHIN THE DESIGN LOAD LIMITS FOR THE ROAD MAY CROSS THE PRECAST CONCRETE BRIDGE.

13.2. LEVELING PAD/SHIMS - THE BRIDGE UNITS AND WINGWALLS SHALL BE SET ON MASONITE OR STEEL SHIMS MEASURING 5" x 5", MINIMUM, UNLESS SHOWN OTHERWISE ON THE PLANS. A MINIMUM GAP OF ½" SHALL BE PROVIDED BETWEEN THE FOOTING AND THE BOTTOM OF THE BRIDGE'S VERTICAL LEGS OR THE BOTTOM OF THE WINGWALL. ALSO, A SUPPLY OF ¼", ½" & ⅛" THICK STEEL OR MASONITE SHIMS FOR VARIOUS SHIMMING PURPOSES SHOULD BE ON SITE.
13.3. PLACEMENT OF BRIDGE UNITS - THE BRIDGE UNITS SHALL BE PLACED AS SHOWN ON THE ENGINEER'S PLAN DRAWINGS. SPECIAL CARE SHALL BE TAKEN IN SETTING THE ELEMENTS TO THE TRUE LINE AND GRADE. THE JOINT WIDTH BETWEEN ADJACENT PRECAST UNITS SHALL NOT EXCEED ¾".

13.4. IT IS IMPERATIVE THAT ANY LATERAL SPREADING OF THE BRIDGE ELEMENTS BE AVOIDED DURING AND AFTER THEIR PLACEMENT. GENERALLY, HORIZONTAL CABLE TIES OR TIE RODS ARE SHIPPED IN THE BRIDGE ELEMENTS TO PREVENT THIS SPREADING. CABLE TIES/TIE RODS SHALL NOT BE REMOVED UNTIL BRIDGE UNITS ARE GROUTED AND GROUT HAS CURED. IF, HOWEVER, DUE TO SITE RESTRICTIONS, THESE CABLE TIES/TIE RODS MUST BE REMOVED PRIOR TO PLACEMENT OF THE BRIDGE ELEMENTS, THE CONTRACTOR MUST NOTIFY CONTECH (MANUFACTURER) AND REQUEST A SUGGESTED INSTALLATION PROCEDURE.

IN ADDITION, IF THE CABLE TIES/TIE RODS MUST BE REMOVED PRIOR TO SETTING ARCH UNITS, THE FOLLOWING QUALITY CONTROL PROCEDURE MUST BE FOLLOWED:
1) FIND "MEASURED SPAN" UPON ARCH UNIT'S DELIVERY TO SITE, PRIOR TO LIFTING FROM TRUCK AND REMOVING CABLE TIES/TIE RODS. "MEASURED SPAN" SHALL BE THE AVERAGE OF (3) SPAN MEASUREMENTS ALONG THE LAY LENGTH OF THE ARCH UNIT.

2) AFTER SETTING OF BRIDGE UNIT ON THE FOUNDATION, VERIFY THE SPAN. THIS "INSTALLED SPAN MEASUREMENT" SHALL NOT EXCEED THE MAXIMUM OF
A) THE NOMINAL SPAN +½" OR
B) THE "MEASURED SPAN".
IF THE "INSTALLED SPAN MEASUREMENT" EXCEEDS THIS AMOUNT, THE ARCH UNIT SHALL BE LIFTED AND RE-SET UNTIL THE "INSTALLED SPAN MEASUREMENT" MEETS THE LIMITS.

13.5. PLACEMENT OF WINGWALLS & HEADWALLS - THE WINGWALLS AND HEADWALLS SHALL BE PLACED AS SHOWN ON THE PLAN DRAWINGS. SPECIAL CARE SHALL BE TAKEN IN SETTING THE ELEMENTS TO THE TRUE LINE AND GRADE.
13.6. WATERPROOFING/JOINT PROTECTION AND SUBSURFACE DRAINAGE
13.6.1. EXTERNAL PROTECTION OF JOINTS - THE BUTT JOINT MADE BY TWO ADJOINING BRIDGE UNITS SHALL BE COVERED WITH A ⅞" x 1⅜" PREFORMED BITUMINOUS JOINT SEALANT AND A MINIMUM OF A 9" WIDE JOINT WRAP. THE SURFACE SHALL BE FREE OF DIRT BEFORE APPLYING THE JOINT MATERIAL. A PRIMER COMPATIBLE WITH THE JOINT WRAP TO BE USED SHALL BE APPLIED FOR A MINIMUM WIDTH OF 9" ON EACH SIDE OF THE JOINT. THE EXTERNAL WRAP SHALL BE EITHER EZ-WRAP RUBBER BY PRESS-SEAL GASKET CORPORATION, SEAL WRAP BY MAR MAC MANUFACTURING CO. INC. OR APPROVED EQUAL. THE JOINT SHALL BE COVERED CONTINUOUSLY FROM THE BOTTOM OF ONE BRIDGE SECTION LEG, ACROSS THE TOP OF THE BRIDGE AND TO THE OPPOSITE BRIDGE SECTION LEG. ANY LAPS THAT RESULT IN THE JOINT WRAP SHALL BE A MINIMUM OF 6" LONG WITH THE OVERLAP RUNNING DOWNHILL.
13.6.2. IN ADDITION TO THE JOINTS BETWEEN BRIDGE UNITS, THE JOINT BETWEEN THE END BRIDGE UNIT AND THE HEADWALL SHALL ALSO BE SEALED AS DESCRIBED ABOVE. IF PRECAST WINGWALLS ARE USED, THE JOINT BETWEEN THE END BRIDGE UNIT AND THE WINGWALL SHALL BE SEALED WITH A 2'-0" STRIP OF FILTER FABRIC. ALSO, IF LIFT HOLES ARE FORMED IN THE BRIDGE UNITS, THEY SHALL BE PRIMED AND COVERED WITH A 9" x 9" SQUARE OF JOINT WRAP.
13.6.3. DURING THE BACKFILLING OPERATION, CARE SHALL BE TAKEN TO KEEP THE JOINT WRAP IN ITS PROPER LOCATION OVER THE JOINT.
13.6.4. SUBSOIL DRAINAGE SHALL BE AS DIRECTED BY THE ENGINEER.

13.7. GROUTING
13.7.1. GROUTING SHALL NOT BE PERFORMED WHEN TEMPERATURES ARE EXPECTED TO GO BELOW 35° F FOR A PERIOD OF 72 HOURS. FILL THE BRIDGE-FOUNDATION KEYWAY WITH CEMENT GROUT (PORTLAND CEMENT AND WATER OR CEMENT MORTAR COMPOSED OF PORTLAND CEMENT, SAND AND WATER) WITH A MINIMUM 28-DAY COMPRESSIVE STRENGTH OF 3000 PSI. VIBRATE AS REQUIRED TO ENSURE THAT THE ENTIRE KEY AROUND THE BRIDGE ELEMENT IS COMPLETELY FILLED. IF BRIDGE ELEMENTS HAVE BEEN SET WITH TEMPORARY TIES (CABLES, BARS, ETC.) GROUT MUST ATTAIN A MINIMUM COMPRESSIVE STRENGTH OF 1500 PSI BEFORE TIES MAY BE REMOVED.
13.7.2. ALL GROUT SHALL HAVE A MAXIMUM AGGREGATE SIZE OF ¼".
13.7.3. LIFTING AND ERECTION ANCHOR RECESSES SHALL BE FILLED WITH GROUT.
13.8. BACKFILL
13.8.1. DO NOT PERFORM BACKFILLING DURING WET OR FREEZING WEATHER.
13.8.2. NO BACKFILL SHALL BE PLACED AGAINST ANY STRUCTURAL ELEMENTS UNTIL THEY HAVE BEEN APPROVED BY THE ENGINEER.
13.8.3. BACKFILL SHALL BE CONSIDERED AS ALL REPLACED EXCAVATION AND NEW EMBANKMENT ADJACENT TO THE PRECAST CONCRETE ELEMENTS. THE PROJECT CONSTRUCTION AND MATERIAL SPECIFICATIONS, WHICH INCLUDE THE SPECIFICATIONS FOR EXCAVATION FOR STRUCTURES AND ROADWAY EXCAVATION AND EMBANKMENT CONSTRUCTION, SHALL APPLY EXCEPT AS MODIFIED IN THIS SECTION.
13.8.4. BACKFILL ZONES:
IN-SITU SOIL
- ZONE A: CONSTRUCTED EMBANKMENT OR OVERFILL.
- ZONE B: FILL THAT IS DIRECTLY ASSOCIATED WITH PRECAST
- CONCRETE BRIDGE INSTALLATION.
ZONE C: ROAD STRUCTURE.
13.8.6. REQUIRED BACKFILL PROPERTIES
13.8.5.1. IN-SITU SOIL - NATURAL GROUND IS TO BE SUFFICIENTLY STABLE TO ALLOW EFFECTIVE SUPPORT TO THE PRECAST CONCRETE BRIDGE UNITS. AS A GUIDE, THE EXISTING NATURAL GROUND SHOULD BE OF SIMILAR QUALITY AND DENSITY TO ZONE B MATERIAL FOR MINIMUM LATERAL DIMENSION OF ONE BRIDGE SPAN OUTSIDE OF THE BRIDGE FOOTING.
13.8.5.2. ZONE A - ZONE A REQUIRES FILL MATERIAL WITH SPECIFICATIONS AND COMPACTING PROCEDURES EQUAL TO THAT FOR NORMAL ROAD EMBANKMENTS.
13.8.5.3. ZONE B - GENERALLY, SOILS SHALL BE REASONABLY FREE OF ORGANIC MATTER, AND, NEAR CONCRETE SURFACES, FREE OF STONES LARGER THAN 3" IN DIAMETER SEE CHARTS FOR DETAILED DESCRIPTIONS OF ACCEPTABLE SOILS.
13.8.5.4. ZONE C - ZONE C IS THE ROAD SECTION OF GRAVEL, ASPHALT OR CONCRETE BUILT IN COMPLIANCE WITH LOCAL ENGINEERING PRACTICES.
13.8.5.5. GEOTECHNICAL ENGINEER SHALL REVIEW GRADATIONS OF ALL INTERFACING MATERIALS AND, IF NECESSARY, RECOMMEND GEOTEXTILE FILTER FABRIC (PROVIDED BY CONTRACTOR)

13.8.6. PLACING AND COMPACTING BACKFILL
DUMPING FOR BACKFILLING IS NOT ALLOWED ANY NEARER THAN 3'-0" FROM THE BRIDGE LEG.

THE FILL MUST BE PLACED AND COMPACTED IN LAYERS NOT EXCEEDING 8". THE MAXIMUM DIFFERENCE IN THE SURFACE LEVELS OF THE FILL ON OPPOSITE SIDES OF THE BRIDGE MUST NOT EXCEED 2'-0".

THE FILL BEHIND WINGWALLS MUST BE PLACED AT THE SAME TIME AS THAT OF THE BRIDGE FILL. IT MUST BE PLACED IN PROGRESSIVELY PLACED HORIZONTAL LAYERS NOT EXCEEDING 8" PER LAYER.

THE BACKFILL OF ZONE B SHALL BE COMPACTED TO A MINIMUM DENSITY OF 95% OF THE STANDARD PROCTOR, AS REQUIRED BY AASHTO T-99.

SOIL WITHIN 1'-0" OF CONCRETE SURFACES SHOULD BE HAND-COMPACTED. ELSEWHERE, USE OF ROLLERS IS ACCEPTABLE. IF VIBRATING ROLLER-COMPACTORS ARE USED, THEY SHOULD NOT BE STARTED OR STOPPED WITHIN ZONE B AND THE VIBRATION FREQUENCY SHOULD BE AT LEAST 30 REVOLUTIONS PER SECOND.

THE BACKFILL MATERIAL AND COMPACTING BEHIND WINGWALLS SHOULD SATISFY THE CRITERIA FOR THE BRIDGE BACKFILL, ZONE B.

BACKFILL AGAINST A WATERPROOFED SURFACE SHALL BE PLACED CAREFULLY TO AVOID DAMAGE TO THE WATERPROOFING MATERIAL.
13.8.7. BRIDGE UNITS
FOR FILL HEIGHTS OVER 12'-0", NO BACKFILLING MAY BEGIN UNTIL A BACKFILL COMPACTION TESTING PLAN HAS BEEN COORDINATED WITH AND APPROVED BY CONTECH® BRIDGE SOLUTIONS. COST OF THE BACKFILL COMPACTION TESTING SHALL BE INCLUDED IN THE COST OF THE PRECAST UNITS. THIS INCLUDED COST APPLIES ONLY TO PROJECTS WITH FILL HEIGHTS OVER 12'-0" (AS MEASURED FROM TOP CROWN OF BRIDGE TO FINISHED GRADE).
13.8.8. WINGWALLS
BACKFILL IN FRONT OF WINGWALLS SHALL BE CARRIED TO GROUND LINES SHOWN IN THE PLANS.
13.8.9. MONITORING
THE CONTRACTOR SHALL CHECK SETTLEMENTS AND HORIZONTAL DISPLACEMENT OF FOUNDATION TO ENSURE THAT THEY ARE WITHIN THE ALLOWABLE LIMIT PROVIDED BY THE ENGINEER. THESE MEASUREMENTS SHOULD GIVE AN INDICATION OF THE SETTLEMENTS AND DEFORMATIONS ALONG THE LENGTH OF THE FOUNDATIONS.

THE FIRST MEASUREMENT ROW SHOULD TAKE PLACE AFTER THE ERECTION OF ALL PRECAST BRIDGE SYSTEM ELEMENTS, A SECOND AFTER COMPLETION OF BACKFILLING, AND A THIRD BEFORE OPENING OF THE BRIDGE TO TRAFFIC. FURTHER MEASUREMENTS MAY BE MADE ACCORDING TO LOCAL CONDITIONS.

THE MAXIMUM DIFFERENCE IN VERTICAL DISPLACEMENTS 'V' SHOULD NOT EXCEED 1" ALONG THE LENGTH OF ONE FOUNDATION.

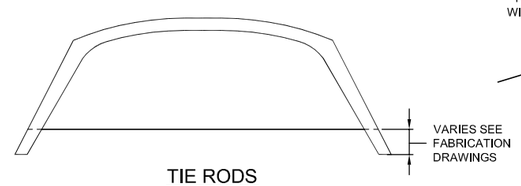

TIE RODS

ACCEPTABLE SOILS FOR USE IN ZONE B BACKFILL

TYPICAL USCS MATERIALS	AASHTO GROUP	AASHTO SUBGROUP	PERCENT PASSING US SIEVE NO.			CHARACTER OF FRACTION PASSING NO. 40 SIEVE		SOIL DESRIPTION
			#10	#40	#200	LIQUID LIMIT	PLASTICITY INDEX	
GW, GP, SP	A1	A-1a	50 MAX	30 MAX	15 MAX		6 MAX	LARGELY GRAVEL BUT CAN INCLUDE SAND AND FINES
GM, SW, SP, SM		A-1b		50 MAX	25 MAX		6 MAX	GRAVELLY SAND OR GRADED SAND, MAY INCLUDE FINES
GM, SM, ML, SP, GP	A2	A-2-4			35 MAX	40 MAX	10 MAX	SANDS, GRAVELS WITH LOW-PLASTICITY SILT FINES
SC, GC, GM		A-2-5			35 MAX	41 MIN	10 MAX	SANDS, GRAVELS WITH PLASTIC SILT FINES
SP, SM, SW	A3			51 MIN	10 MAX		NON-PLASTIC	FINE SANDS
ML, SM, SC	A4				36 MIN	40 MAX	10 MAX	LOW-COMPRESSIBILTY SILTS

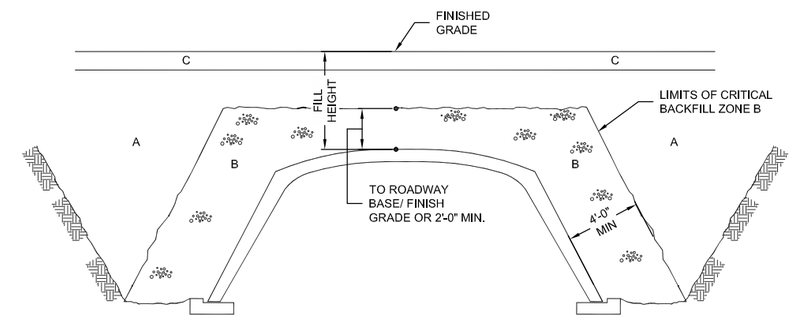

SPAN	FILL HEIGHT	ACCEPTABLE MATERIAL INSIDE ZONE B
≤ 24'-0"	≥ 12'-0"	A1, A3
≤ 24'-0"	< 12'-0"	A1, A2, A3, A4
> 24'-0"	ALL	A1, A3

BACKFILL REQUIREMENTS

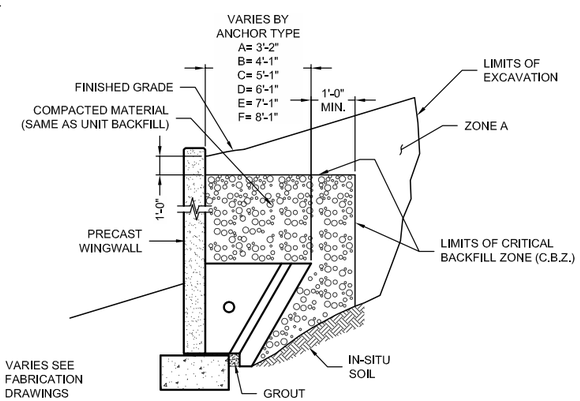

WALL BACKFILL REQUIREMENTS

The design and information shown on this drawing is provided as a service to the project owner, engineer and contractor by Contech Engineered Solutions LLC ("Contech"). Neither this drawing, nor any part thereof, may be used, reproduced or modified in any manner without the prior written consent of Contech. Failure to comply is done at the user's own risk and Contech expressly disclaims any liability or responsibility for such use.

If discrepancies between the supplied information upon which the drawing is based and actual field conditions are encountered as site work progresses, these discrepancies must be reported to Contech immediately for re-evaluation of the design. Contech accepts no liability for designs based on missing, incomplete or inaccurate information supplied by others.

MARK	DATE	REVISION DESCRIPTION	BY
---		---	--
---		---	--
---		---	--
---		---	--
---		---	--

CONTECH® ENGINEERED SOLUTIONS LLC
www.ContechES.com
11835 NE Glenn Widing Drive, Portland, OR 97220
800-548-4667 503-240-3393 800-561-1271 FAX

CON/SPAN. Q-SERIES.

PROPOSAL DRAWING

3000W Badger Creek Bridge
NOT FOR CONSTRUCTION

Tetonia, ID

PROJECT No.:	SEQ. No.:	DATE:
478150	010	4/5/2013
DESIGNED: KKV		DRAWN: N/A
CHECKED: JL		APPROVED: XXX
SHEET NO.: 5 OF 5		

C:\DOCUMENTS AND SETTINGS\VOORHEESKMY DOCUMENTS\PROJECT FILES\IDAHO\CLARK\SE 5334\LEADS\478150 3000W BADGER CREEK\DESIGN\CONTECH\478150 BADGER CREEK C-043 PRELIM 4000 FR REV 1 SHT X OF X.DWG 4/12/2013 3:33 PM