REQUEST FOR QUALIFICATIONS

Teton County, Idaho will accept Statements of Qualifications, identified on the envelope, for the supply of:

BRIDGE CONSTRUCTION & STREAM STABILIZATION

The County of Teton in the State of Idaho ("County") is soliciting responses to a Request for Qualifications (RFQ). This response, or Statements of Qualifications (SOQ), will be to pre-qualify contractors/teams for the replacement of the bridge across Badger Creek on W10,000N and stream stabilization upstream and downstream of the bridge.

The requirements will be available August 23rd, at the Teton County Recorder's Office at 150 Courthouse Drive, Driggs, Idaho, 208-354-0245. The deadline for submitting the responses (SOQ) is Friday, September 7, 2012 at 10:00am local time.

The Contractor shall comply with all fair labor practices and must meet the requirements of State statutes.

REQUEST FOR QUALIFICATIONS

BRIDGE CONSTRUCTION & STREAM STABILIZATION

1) PURPOSE OF REQUEST

i) The County of Teton in the State of Idaho ("County") is soliciting responses to this Request for Qualifications (RFQ). This response, or Statements of Qualifications (SOQ), will be to pre-qualify contractors/contractor teams for the construction of the W10,000N bridge and stream stabilization of Badger Creek, pursuant to Title 67, Chapter 2805(3)(b).

ii) The purpose of this Request for Qualifications (RFQ) is to establish a list of qualified applicants eligible to participate in the preparation and submission of bids for construction and to rank the qualified applicants. Eligibility and ranking criteria will be based on the firm's qualifications, capabilities and experience as demonstrated by satisfactory completion of similar projects that involved the specific types of construction techniques identified below.

2) PROJECT LOCATION:

The project is located at W10,000N and Badger Creek.

3) TIME SCHEDULE

i) The County will follow the following general timetable:

(a) Issue RFQ 8/23/2012

(b) Deadline for Submittal of Responses to RFQ

(i) The deadline for submitting the responses (SOQ) is Friday, September 7, 2012 at 10:00am local time.

4) INSTRUCTIONS TO PROPOSERS

i) All responses shall be sent to:

Jay Mazalewski / County Engineer
Teton County
150 Courthouse Drive
Driggs, ID 83422
(208) 354-0245

Or hand delivered to the County Clerk/Recorder office at 150 Courthouse Drive, Driggs, Idaho.

ii) Please place three (3) copies of your SOQ in a sealed envelope and clearly label "SOQ for Bridge Reconstruction & Stream Stabilization" and the name of the respondent.

iii) Qualifications should be prepared simply and economically, providing a straight forward, concise description of provider capabilities to satisfy the requirements of the request. Emphasis should be on completeness and clarity of content. Use of both sides of paper sheets for any submittals to the County is desirable whenever practicable.

iv) An authorized representative of the firm must complete and sign at least one (1) original of its SOQ, certifying the truth of the statements and representations made in the SOQ. This can be addressed in the cover letter.

v) Any questions concerning the County's RFQ process shall be directed to Jay Mazalewski / County Engineer at (208) 354-0245 or emailed to jmaz@co.teton.id.us. (See section 6)

vi) Required information: To be selected, a Statement of Qualifications must demonstrate that the Respondent is highly qualified by expertise and experience to perform the Services. A Statement of Qualifications should emphasize the Respondent's qualifications and experience regarding all aspects of the Services. At a minimum, all of the following information MUST be furnished by each Respondent as part of its Statement of Qualifications. The information provided must be complete and accurate. Any omission, inaccuracy, or misstatement may be cause for rejection of the Proposal.

1) Cover Letter: letter should introduce your team, identify the single point of contact, and provide the contact telephone number and address of the project manager. This letter should include a statement committing the personnel and resources identified in the proposer's submittal. It should also include:

a. Full, correct legal name and type of business entity.
b. Address (street and mailing)
c. Name of respondent's representative for purposes of notice or other communications regarding the RFQ.
d. Telephone, Facsimile numbers and email addresses of the office and the representative.

2) Provide an organizational chart including any subcontractors and their role in the project.
3) Provide length of existence of the company and subcontractor companies.
4) Please list name(s) of the person you will be designating as foreman for this project and all equipment operators along with their individual experience and number of years performing similar work. Include only those individuals that will actually be working on this project. List all relevant professional licenses, degrees and training for each of your company employees.
5) Provide a general overview of your company's experience in bridge construction projects.
6) Provide a general overview of your company's experience in stream restoration implementation.
7) Provide detailed information for at least five projects your company has completed that are relevant to this project. Include project costs and descriptions.
8) Describe your companies past experience installing structures that will be used for this project.
9) Please list the equipment that you will use for project construction. If your company will need additional equipment, describe how you intend to acquire said equipment.
10) State your company's Public Works Certification class, type and category.
11) Describe the ability of your company to obtain Bid, Performance and Payment Bonds in the amount equal to 5%, 100%, and 100% respectively and the amount of bonding your company can provide for this project
12) Please provide three references who have worked with you in the past five years. If you will be using subcontractors, provide three references for each subcontractor.
13) Describe your ability to complete this project with prior to the 2013 runoff season.
14) Familiarity and knowledge of local streams and hydrology.

5) SELECTION CRITERIA/PROCESS

a) A Scoring committee will be formed consisting of three to five people from the County and the design team. Each component of the qualifications package will be evaluated based on the information in the Scoring Table and this RFQ.

b) All scores will be totaled and returned to the Board of County Commissioners within 30 days of SOQ opening.

c) The Board of County Commissioners will select, at a timeline of their choosing, the most qualified firm on the basis of demonstrated competence and qualifications for the type of professional services required.

d) All firms/teams who submit SOQs will be notified of the Board of County Commissioners choice.

e) Final approval of any selected firms/teams is subject to the action of the Board of County Commissioners.

SCORING TABLE			
Criteria		**Available Score**	**Score**
1	Cover Letter	1 = complies with req. 0 = does not comply	
2	Organizational Chart	0 to 2, where 2 is highest score	
3	Company Existence Time	0 to 2, where 2 is highest score	
4	Foreman & Crew	0 to 2, where 2 is highest score	
5	Bridge Experience	0 to 2, where 2 is highest score	
6	Steam Restoration Experience	0 to 2, where 2 is highest score	
7	Relevant Projects	0 to 2, where 2 is highest score	
8	Relevant Stream Structure Installation	0 to 2, where 2 is highest score	
9	Equipment	0 to 2, where 2 is highest score	
10	Public Works Licensure	0 to 2, where 2 is highest score	
11	Bid/Performance/Payment Bonding	0 to 2, where 2 is highest score	
12	References	0 to 2, where 2 is highest score	
13	Timeline	0 to 2, where 2 is highest score	
14	Local Stream Knowledge	0 to 2, where 2 is highest score	
		Total:	

6) TERMS AND CONDITIONS

a) The County reserves the right to reject any and all responses, and to waive minor irregularities in any RFQ responses.
b) The opening of any RFQ response does not constitute acceptance of such respondent as a responsible, qualified respondent.
c) The County reserves the right to request clarification of information submitted, and to request additional information from any consultant.
d) Any RFQ response may be withdrawn up until the date and time set above for opening of the RFQ responses.
e) The County reserves the right, in its sole discretion, to reject any and all Statements of Qualifications and to waive any technicality, informality or irregularity in any Statement of Qualifications received for any reason at any time prior to entering into a contract to perform the Services. Without limiting the foregoing, the County specifically reserves the right to reject a Statement of Qualifications if the Respondent fails to furnish the data required by this RFQ or if the Statement of Qualifications is in any way incomplete or irregular.
f) The County shall not be responsible for any costs incurred by the firm in preparing, submitting or presenting its response to the RFQ.
g) Firms and teams may submit written questions concerning this RFQ to the Contact Person for receipt no later than 5:00 PM local time on August 31, 2012. Questions may be submitted to Jay Mazalewski via email to jmaz@co.teton.id.us or by facsimile at (208)354-8778. Questions received after the stated deadline will not be answered. No oral statement of any person shall modify or otherwise change or affect the terms, conditions or specifications stated in the RFQ, and changes to the RFQ, if any, shall be made in writing only and issued in the form of an Addendum to the RFQ and highlighted in the RFQ. All addenda will be sent to the prospective consultants.

7) PROPOSED SCOPE OF SERVICES

The W10,000N Bridge Replacement and Stream Stabilization project will generally consist of the removal of the existing bridge, construction of the new bridge, and stream stabilization upstream and downstream of W10,000N. The design plans are attached to this RFQ. An anticipated scope of services is outline below:

1) Establish erosion control measures.
2) Establish traffic safety measures.
3) Remove & dispose of the existing W10,000N Badger Creek bridge.
4) Coordinate with the bridge design engineer.
5) Construction Staking.
6) Procure and install new pre-cast concrete bridge as specified.
7) Backfill, compact & grade abutments and roadway as shown.
8) Coordinate with the stream restoration designer.
9) Procure materials necessary for the installation of stream stabilization structures including; rock cross vane, rock j-hook, rock barb, root wad revetment.
10) Installation of stream stabilization structures

11) Removal of stream channel gravel.
12) Shaping of stream channel.

8) COMPENSATION

a) At the designated time and date as shown in the Advertisement for RFQs, the Evaluation Committee will open the RFQ applications for evaluation. The RFQs will be opened in public and reviewed in private. The Evaluation Committee will determine whether applicants are either "qualified" or "not qualified" to be a qualified contractor. The decision shall be final and conclusive. Firms that are named as qualified to perform will be placed on a listing as a qualified firm for one year. Denial of qualification shall not be the basis for any monetary claim or action for injunctive relief against the Evaluation Committee or FTR or any of its employees. In determining whether an applicant should be qualified, the Committee, in its sole and absolute discretion, will decide whether the applicant is capable of fully performing the contractual requirements for the project, in all respects.

b) Estimated contract will range from $100,000 to $165,000.

PROPOSED PLANS
BADGER CREEK BRIDGE

4500 West County Road 10000 North
SEC 10 T6N R45E
Teton County, Idaho

DESIGN LOADS:

ALLOWABLE SOIL BEARING PRESSURE: 4000 PSF

DESIGN LIVE LOAD:
DECK (GROUND SNOW LOAD) 95 PSF
AASHTO VEHICLE LIVE LOAD HS20-44

DESIGN DEAD LOAD:
6" OF ¾" CRUSHED GRAVEL, (GRADING H), WEARING SURFACE 75 PSF

SEISMIC CLASS: D

CONSTRUCTION SPECIFICATIONS:

BRIDGE CONSTRUCTION SHALL CONFORM TO THE FOLLOWING:

AASHTO STANDARD SPECIFICATIONS FOR HIGHWAY BRIDGES, 17TH EDITION, 2002.

IDAHO STANDARDS FOR PUBLIC WORKS CONSTRUCTION.

GENERAL NOTES:

1. CONTRACTOR SHALL VERIFY ALL DIMENSIONS IN THE FIELD AND SHALL PROMPTLY NOTIFY THE ENGINEER OF ANY VARIATIONS OR DISCREPANCIES.

2. ENGINEER SHALL HAVE THE RIGHT TO REJECT ANY MATERIAL DELIVERED TO THE SITE NOT CONFORMING TO THE PLANS AND SPECIFICATIONS.

3. STRUCTURAL MEMBERS SHALL BE ADEQUATELY SHORED AND BRACED DURING CONSTRUCTION.

4. MATERIAL CERTIFICATIONS SHALL BE REQUIRED FOR ALL PRECAST CONCRETE.

5. SHOP DRAWINGS – CONTRACTOR SHALL REVIEW SHOP DRAWINGS AND FABRICATION DETAILS AND SPECIFICALLY NOTE ANY DEFICIENCIES OR DEVIATIONS FROM THE PLANS AND SPECIFICATIONS. AFTER REVIEW, CONTRACTOR SHALL SUBMIT FOUR COPIES OF THE SHOP DRAWINGS TO ENGINEER FOR REVIEW.

6. WELDING SHALL BE PERFORMED BY OPERATORS CERTIFIED FOR THE REQUIRED WELD POSITION AND THICKNESS

7. CONSTRUCTION OPERATIONS SHALL BE PERFORMED TO PREVENT EROSION, SEDIMENT, AND DEBRIS FROM ENTERING BADGER CREEK

8. CONSTRUCTION OPERATIONS SHALL BE PERFORMED TO PREVENT DISTURBANCE TO WETLAND AREAS. NO AREAS DESIGNATED AS WETLANDS ARE TO BE FILLED WITHOUT FIRST OBTAINING NECESSARY PERMITS FROM THE ARMY CORPS OF ENGINEERS.

9. NO IN-STREAM CONSTRUCTION ACTIVITIES SHALL BE PERFORMED IN BADGER CREEK WITHOUT FIRST OBTAINING NECESSARY PERMITS FROM THE ARMY CORPS OF ENGINEERS.

10. ENGINEER SHALL BE CONTACTED PRIOR TO CONSTRUCTION TO PROVIDE CONSTRUCTION OBSERVATION WHEN ENGINEER'S CERTIFICATION IS REQUIRED FOR THE COMPLETED STRUCTURE.

EXCAVATION AND GRADING:

1. FOOTINGS SHALL BEAR ON 12" MINIMUM STRUCTURAL FILL MATERIAL, (3" MINUS PIT-RUN), OVER COMPACTED UNDISTURBED NATIVE SOIL OR ROCK. THE FOUNDATION SOIL SHALL BE UNIFORM THROUGHOUT THE STRUCTURE.

2. FOUNDATION SOILS, OTHER THAN ALLUVIAL SAND AND GRAVEL MIXTURES SHALL BE REVIEWED BY ENGINEER PRIOR TO FOUNDATION CONSTRUCTION.

3. EXCAVATIONS SHALL BE ADEQUATELY SHORED AND BRACED TO PREVENT COLLAPSE.

4. ALL EXCAVATION ACTIVITIES SHALL CONFORM WITH PERMIT REQUIREMENTS ISSUED FOR THE PROJECT. CONTRACTOR SHALL REVIEW AND BE RESPONSIBLE FOR PERMIT COMPLIANCE.

5. TOPSOIL, VEGETATION, AND UNSTABLE OR FROZEN SOIL SHALL BE REMOVED PRIOR TO CONSTRUCTING STRUCTURES OR EMBANKMENTS.

6. ABUTMENT BACKFILL SHALL BE COMPLETED IN EQUAL LIFTS ON BOTH SIDES OF WALL TO PREVENT DISPLACEMENT.

7. BACK FILL AND EMBANKMENTS SHALL BE MOISTENED AND COMPACTED TO ACHIEVE AT LEAST 95% OF THE MAXIMUM DRY DENSITY DETERMINED BY AASHTO T-99, STANDARD PROCTOR DENSITY.

8. CRUSHED GRAVEL SHALL CONFORM TO GRADING H, AND SHALL BE MOISTENED AND COMPACTED TO ACHIEVE AT LEAST 95% OF THE MAXIMUM DRY DENSITY DETERMINED BY AASHTO T-99, STANDARD PROCTOR DENSITY.

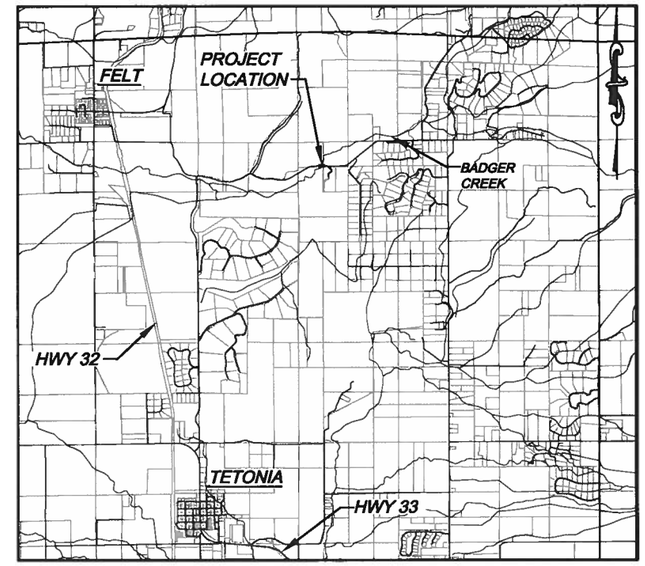

VICINITY MAP
SCALE: 1"= 2000'

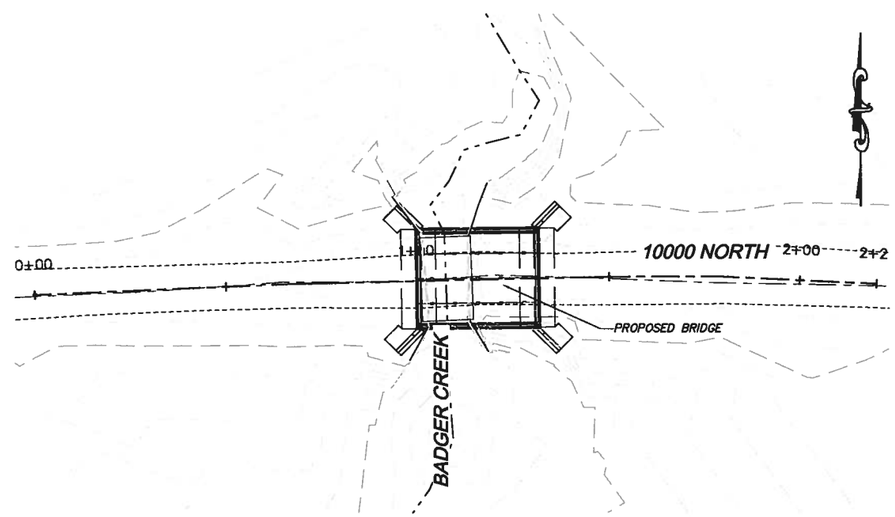

LOCATION MAP
SCALE: 1"= 20'

INDEX OF SHEETS

SHEET NUMBER:	SHEET TITLE:
C0.1	TITLE SHEET, LEGEND, AND VICINITY MAP
C1.1	BRIDGE PLAN AND PROFILE
1-8 of 8	OLDCASTLE PRECAST BRIDGE DETAILS

LEGEND

SYMBOL	DESCRIPTION
	EXISTING CENTERLINE OF ROAD
	EXISTING EDGE OF GRAVEL

PROFESSIONAL ENGINEER REGISTERED 13031 9-1-11 STATE OF IDAHO DARRYL W. JOHNSON

September 2011

PLAN VERSION	DATE	DRAFTER	APPROVED
CONST. DOCUMENTS	9/01/2011	jm	DWJ

SHEET TITLE: COVER SHEET

PROJECT TITLE: BADGER CREEK BRIDGE REPLACEMENT TETON COUNTY, IDAHO

JORGENSEN ASSOCIATES, P.C.
Engineering Land Surveying Planning
P.O. Box 746 Rexburg, Idaho 83440 Idaho 83422
(208) 354-8330 FAX (208) 354-8273
E-mail: jm@jorgensenassociates.com

PROJECT NUMBER 11501

SHEET C0.1

Plotted by jmann on Sep 01, 2011 - 11:03am
K:\2011\11501\01\Acad\Sheet\11501_C01_Cover.dwg

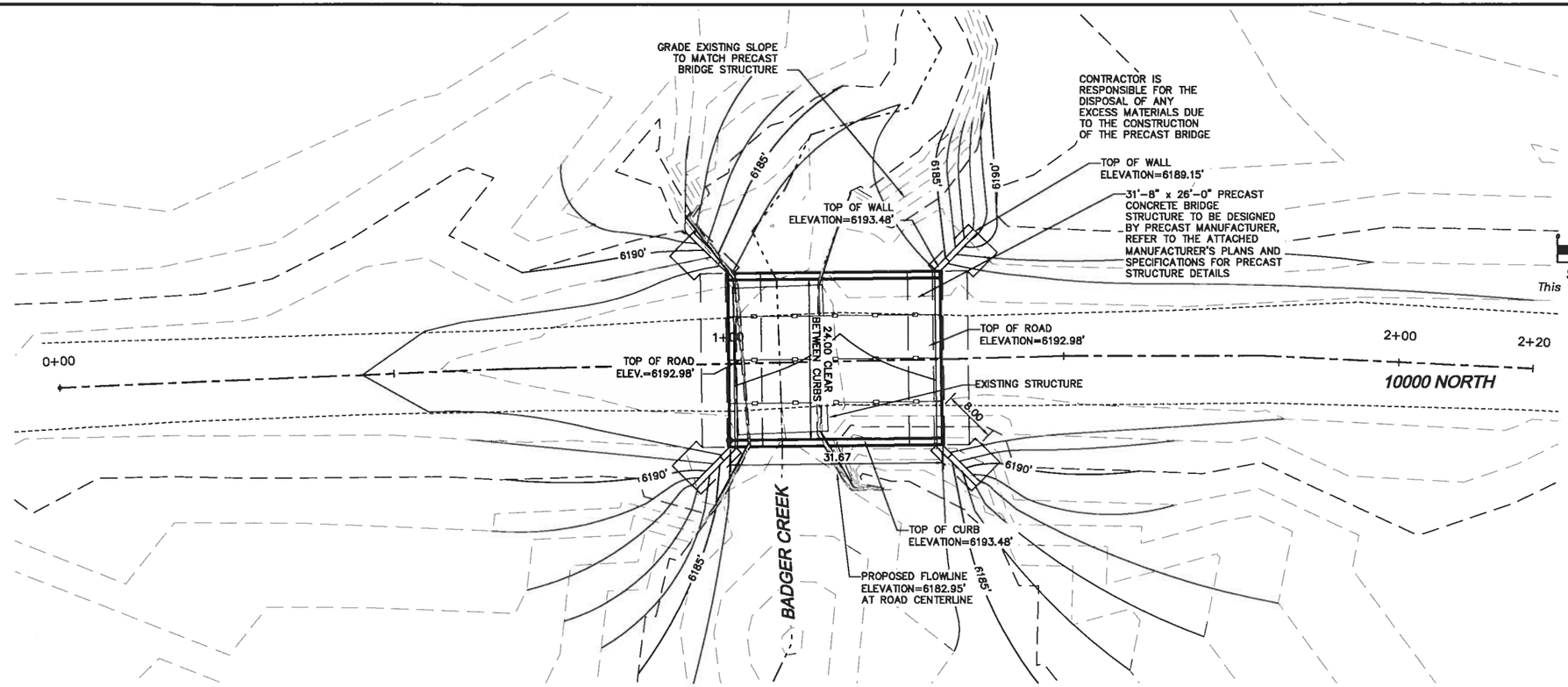

BRIDGE PLAN

Scale: 1 inch = 10 feet
This scale valid only for 22x34 prints.

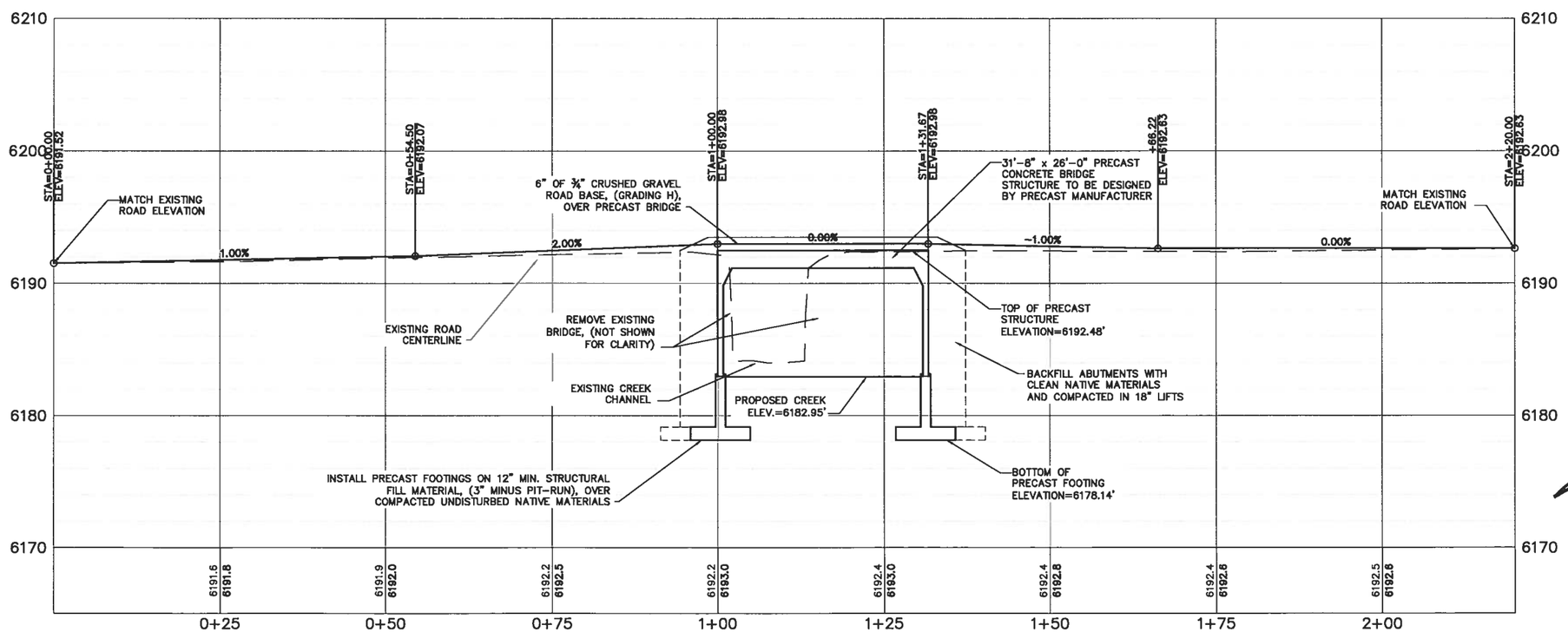

PROFILE

PROFESSIONAL ENGINEER REGISTERED 13031 9-1-11 STATE OF IDAHO DARRYL W. JOHNSON

PLAN VERSION	DATE	DRAFTER	APPROVED
CONST. DOCUMENTS	9/01/2011	jm	DWJ

SHEET TITLE: BRIDGE LAYOUT PLAN AND PROFILE

PROJECT TITLE: BADGER CREEK BRIDGE REPLACEMENT TETON COUNTY, IDAHO

JORGENSEN ASSOCIATES, P.C.
Engineering • Land Surveying • Planning
P.O. Box 396, 154 E. Broadway Ave. Rexburg, Idaho 83440
(208) 356-9441 FAX (208) 356-9220
E-mail: ja@jorgensenassociates.com

PROJECT NUMBER 11501

SHEET C1.1

Plotted by jmann on Sep 01, 2011 - 10:51am

K:\2011\11501\01\Acad\Sheet\11501_C12_Bridge.dwg

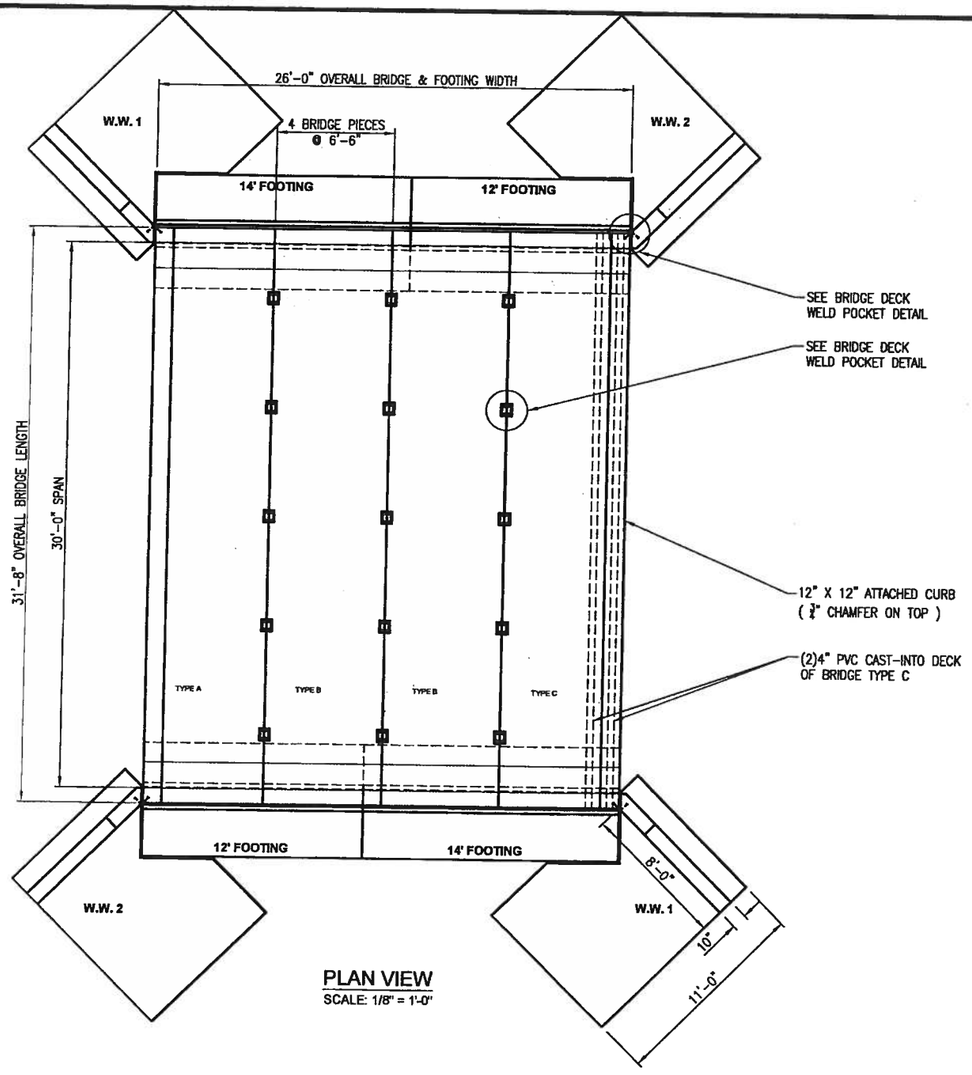

PLAN VIEW
SCALE: 1/8" = 1'-0"

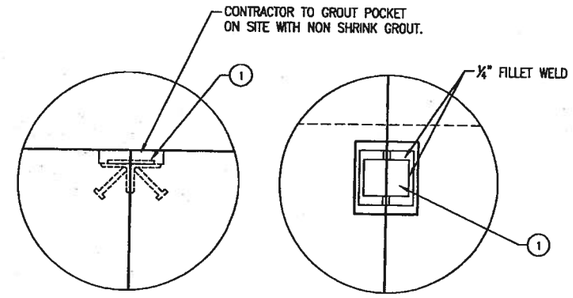

BRIDGE DECK WELD POCKET DETAIL

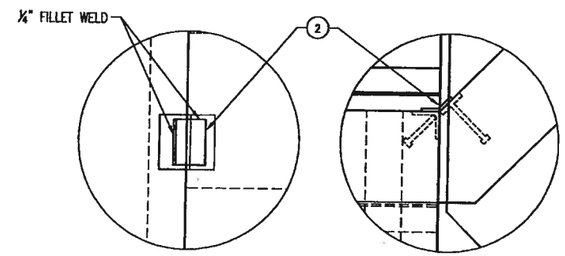

WING WALL WELD DETAIL

DESIGN NOTES:

1. DESIGN LOADINGS:
   1.1. AASHTO HS-20-44 W/IMPACT.
   1.2. DEPTH OF OVERBURDEN 0.0' MIN 1.0' MAX.
2. LATERAL LIVE LOAD SURCHARGE PER SPECS.
3. CONCRETE 28 DAY COMPRESSIVE STRENGTH SHALL BE 7000 PSI (MIN).
4. STEEL REINFORCEMENT: REBAR, ASTM A-615 GRADE 60
5. CEMENT: ASTM C-150 SPECIFICATIONS.

INSTALLATION NOTES:

6. FOOTING TO BE LEVEL, COMPACTED SURFACE PROVIDING A MINIMUM 4,000 PSF BEARING CAPACITY.
7. CONTRACTOR SHALL EXCAVATE,BACKFILL, AND COMPACT PER THE LATEST ISPWC CODE.
8. ANY INSTALLATION QUESTIONS SHALL BE DIRECTED TOWARDS OLDCASTLE PRECAST.
9. CONTRACTOR TO FILL ALL POCKETS AND KEYWAYS WITH 4,000 PSI NON SHRINK GROUT.

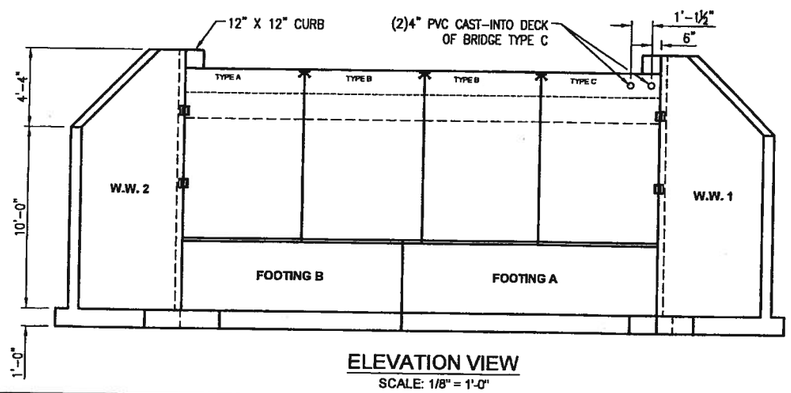

ELEVATION VIEW
SCALE: 1/8" = 1'-0"

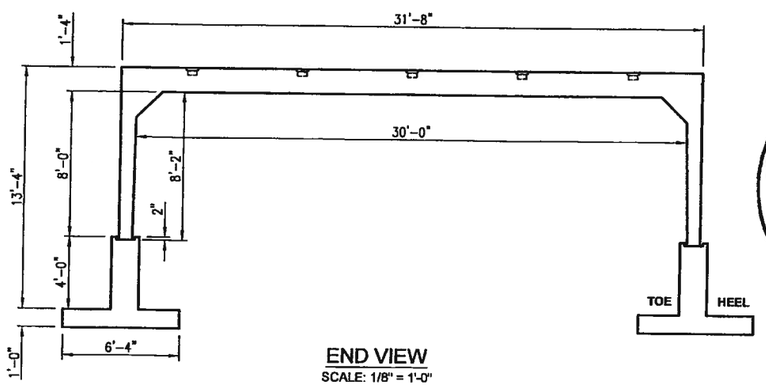

END VIEW
SCALE: 1/8" = 1'-0"

PROFESSIONAL ENGINEER
LICENSED
14016
8/26/11
STATE OF IDAHO
MICHAEL P. BLACKHAM

LOOSE SHIPPED ITEMS

#	QTY	DESCRIPTION	AX#
1	15 EA	4"X6"X⅜" WELD PLATE	
2	8 EA	4"X6"X⅜" WELD PLATE 45° BEND	
	3 EA	9" X 50' JOINT SEALANT WRAP	7001125

PRODUCT WEIGHTS

PRODUCT	QTY.	WEIGHT
BRIDGE TYPE A W/CURB	1	60290
BRIDGE TYPE C W/CURB	1	60290
BRIDGE TYPE B	2	55540
WING WALLS	4	25725
14' FOOTING	2	25535
12' FOOTING	2	21890

Oldcastle Precast®
2240 YELLOWSTONE HYW IDAHO FALLS, IDAHO 83402
PHONE: (208) 522-9150, FAX: (208) 522-9701

THIS DOCUMENT IS THE PROPERTY OF OLDCASTLE PRECAST, INC. IT IS SUBMITTED FOR REFERENCE PURPOSES ONLY AND SHALL NOT BE USED IN ANY WAY INJURIOUS TO THE INTERESTS OF SAID COMPANY. COPYRIGHT © 2010 OLDCASTLE PRECAST, INC. ALL RIGHTS RESERVED.

30' SPAN W/STEM WALL FOOTINGS
BRIDGE LAYOUT DETAILS
BADGER CREEK BRIDGE

CUSTOMER
TETON COUNTY - IDAHO

DATE	SALES	DRAWN	ENGINEER	CHECKED	SALES ORDER
8/25/11	CE	JWB			144336

DRAWING NUMBER	REVISION	SHEET
230-S144336-001	—	1 OF 9
	REV DATE —	

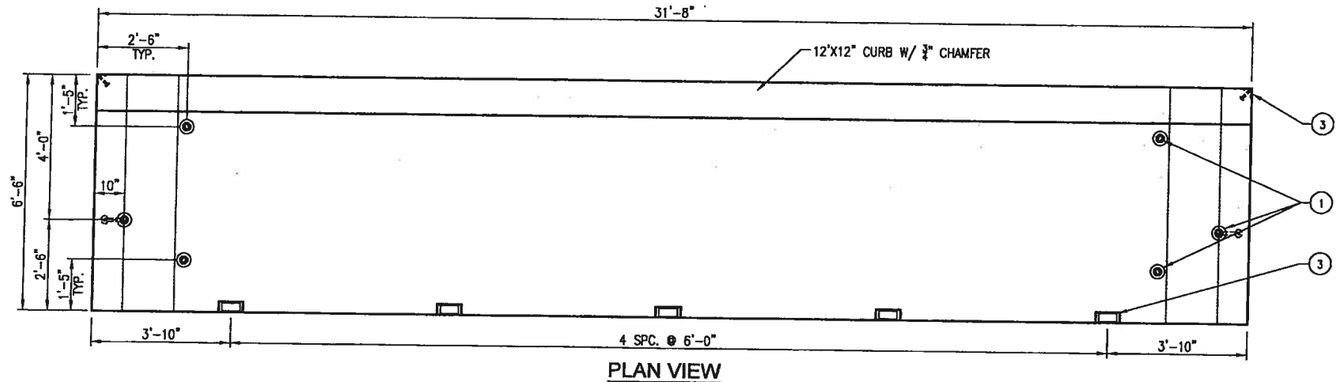

PLAN VIEW
SCALE: 1/4" = 1'-0"

NOTE:
- BRIDGE STRIPPING STRENGTH 4000 PSI CONCRETE MIN. BEFORE STRIPPING .

DESIGN NOTES:

1. DESIGN LOADINGS:
   1.1. AASHTO HS-20-44 W/IMPACT.
   1.2. DEPTH OF OVERBURDEN 0.0' MIN 1.0' MAX.
2. LATERAL LIVE LOAD SURCHARGE PER SPECS.
3. CONCRETE 28 DAY COMPRESSIVE STRENGTH SHALL BE 7000 PSI (MIN).
4. STEEL REINFORCEMENT: REBAR, ASTM A-615 GRADE 60
5. CEMENT: ASTM C-150 SPECIFICATIONS.

INSTALLATION NOTES:

6. FOOTING TO BE LEVEL, COMPACTED SURFACE PROVIDING A MINIMUM 4,000 PSF BEARING CAPACITY.
7. CONTRACTOR SHALL EXCAVATE,BACKFILL, AND COMPACT PER THE LATEST ISPWC CODE.
8. ANY INSTALLATION QUESTIONS SHALL BE DIRECTED TOWARDS OLDCASTLE PRECAST.
9. CONTRACTOR TO FILL ALL POCKETS AND KEYWAYS WITH 4,000 PSI NON SHRINK GROUT.

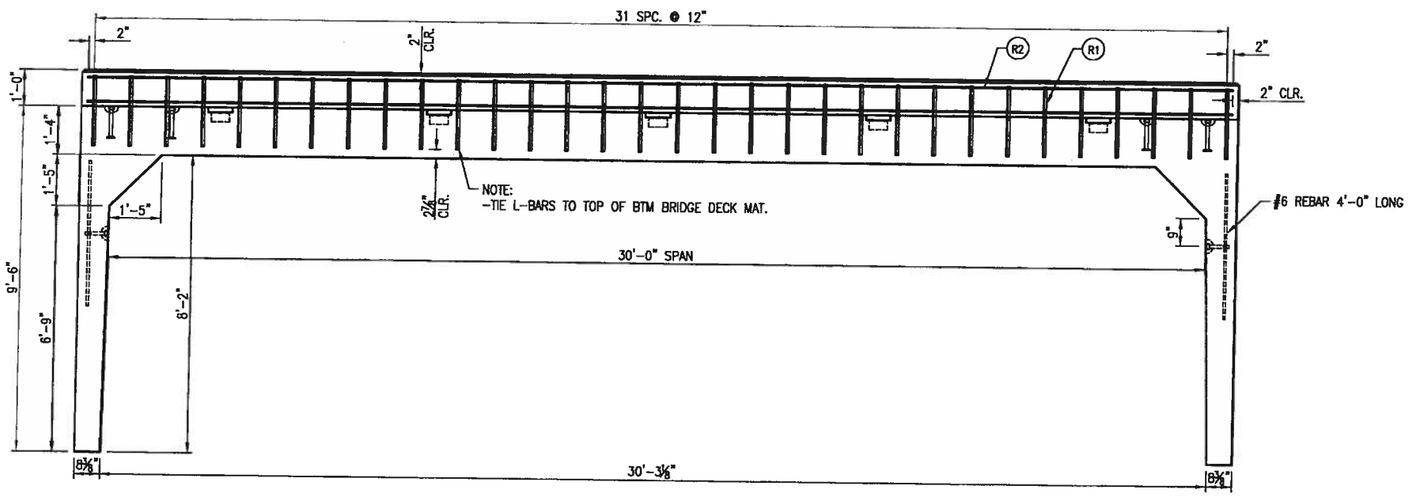

ELEVATION VIEW
(CURB STEEL SHOWN)
SCALE: 1/4" = 1'-0"

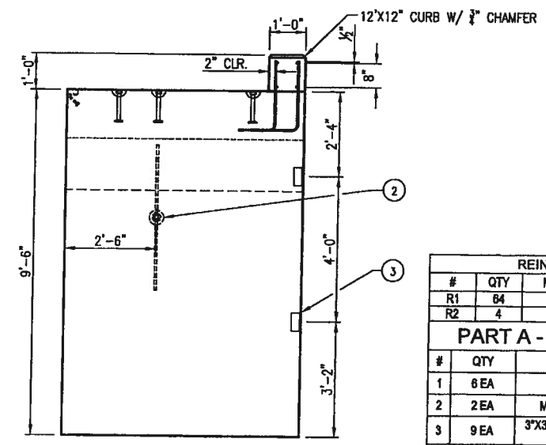

END VIEW
SCALE: 1/4" = 1'-0"

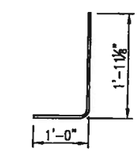

R1 DETAIL

REINFORCEMENT CUT LIST				
#	QTY	MATERIAL	LENGTH	SHAPE
R1	64	#4 BAR	2'-9 3/4"	L BAR
R2	4	#4 BAR	31'-4"	STR

PART A - BILL OF MATERIALS

#	QTY	DESCRIPTION	AX#
1	6 EA	MB 16T X 10" D.B. LIFTER	7001195
2	2 EA	MB 8T X 7 1/8" D.B. EYE LIFTER	7001190
3	9 EA	3"X3"X¼" ANGLE 6" LONG W/(2)½"X4" STUD	7003446
	14.886 CYD	PRECAST MIX DESIGN SCC	9002500
	1187 LBS	#4 REBAR	8010012
	1030 LBS	#5 REBAR	8010013
	1193 LBS	#6 REBAR	8010014

PRODUCT WEIGHTS

PRODUCT	QTY.	WEIGHT
TYPE A	2	60290

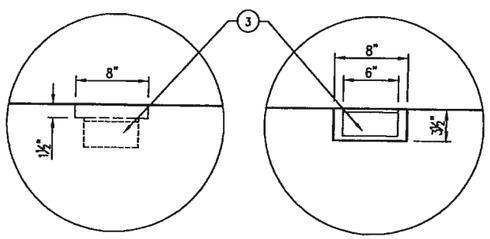

BRIDGE DECK WELD POCKET DETAIL

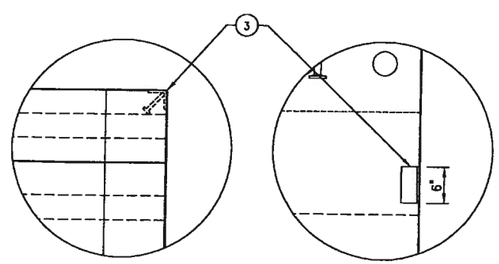

BRIDGE LEG WELD PLATE DETAIL

PROFESSIONAL ENGINEER
LICENSED
14016
8/26/11
STATE OF IDAHO
MICHAEL P. BLACKHAM

Oldcastle Precast®
2240 YELLOWSTONE HYW IDAHO FALLS, IDAHO 83402
PHONE: (208) 522-8150, FAX: (208) 522-9701

THIS DOCUMENT IS THE PROPERTY OF OLDCASTLE PRECAST, INC. IT IS SUBMITTED FOR REFERENCE PURPOSES ONLY AND SHALL NOT BE USED IN ANY WAY INJURIOUS TO THE INTERESTS OF SAID COMPANY. COPYRIGHT © 2010 OLDCASTLE PRECAST, INC. ALL RIGHTS RESERVED.

30' SPAN W/STEM WALL FOOTINGS
TYPE A DETAILS
BADGER CREEK BRIDGE

CUSTOMER
TETON COUNTY - IDAHO

DATE	SALES	DRAWN	ENGINEER	CHECKED	SALES ORDER
8/25/11	CE	JWB			144336

DRAWING NUMBER	REVISION	SHEET
230-S144336-001	—	2 OF 9
	REV DATE —	

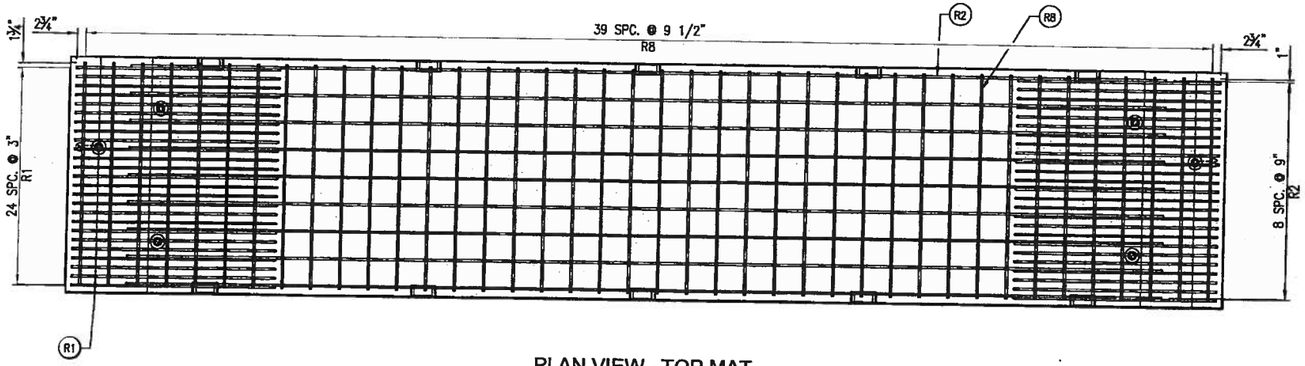

PLAN VIEW - TOP MAT
SCALE: 1/4" = 1'-0"

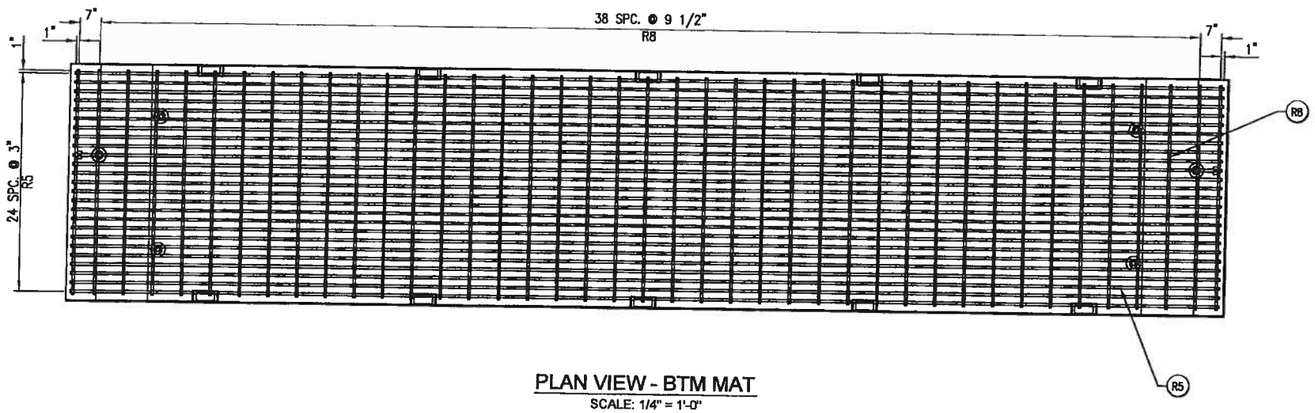

PLAN VIEW - BTM MAT
SCALE: 1/4" = 1'-0"

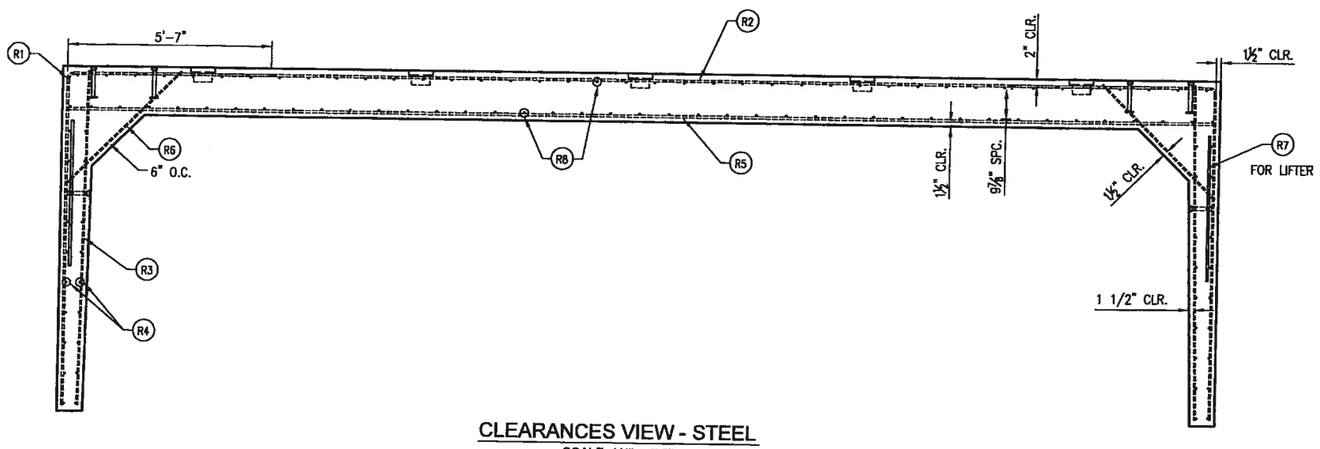

CLEARANCES VIEW - STEEL
SCALE: 1/4" = 1'-0"

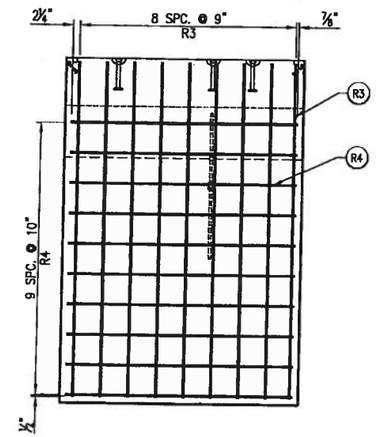

END VIEW - INSIDE MAT
SCALE: 1/4" = 1'-0"

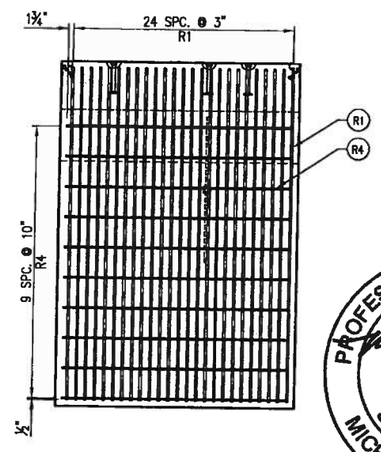

END VIEW - OUTSIDE MAT
SCALE: 1/4" = 1'-0"

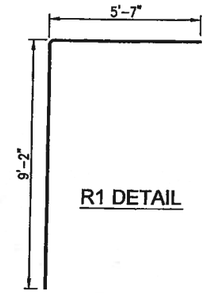

R1 DETAIL

REINFORCEMENT CUT LIST

#	QTY	MATERIAL	LENGTH	SHAPE
R1	50	#5 BAR	14'-7 1/2"	L BAR
R2	9	#5 BAR	28'-4"	STR
R3	50	#4 BAR	9'-2 1/2"	STR
R4	40	#4 BAR	6'-2"	STR
R5	25	#6 BAR	31'-5"	STR
R6	26	#4 BAR	4'-5"	STR
R7	2	#6 BAR	4'-0"	STR
R8	81	#5 BAR	6'-2"	STR

STEEL WEIGHT

PRODUCT	MATERIAL	WEIGHT
TYPE A	#4/GRD60	550
TYPE A	#5/GRD60	1551
TYPE A	#6/GRD60	1193
CHAIRS	#4/GRD60	100

PROFESSIONAL ENGINEER
LICENSED
14016
8/26/11
STATE OF IDAHO
MICHAEL P. BLACKHAM

Oldcastle Precast®
2240 YELLOWSTONE HYW IDAHO FALLS, IDAHO 83402
PHONE: (208) 522-6150, FAX: (208) 522-6791

THIS DOCUMENT IS THE PROPERTY OF OLDCASTLE PRECAST, INC. IT IS SUBMITTED FOR REFERENCE PURPOSES ONLY AND SHALL NOT BE USED IN ANY WAY INJURIOUS TO THE INTERESTS OF SAID COMPANY. COPYRIGHT © 2010 OLDCASTLE PRECAST, INC. ALL RIGHTS RESERVED.

30' SPAN W/STEM WALL FOOTINGS
TYPE A & B STEEL DETAILS
BADGER CREEK BRIDGE

CUSTOMER
TETON COUNTY - IDAHO

DATE	SALES	DRAWN	ENGINEER	CHECKED	SALES ORDER
8/25/11	CE	JWB			144336

DRAWING NUMBER	REVISION	SHEET
230-S144336-001	—	3 OF 9
	REV DATE —	

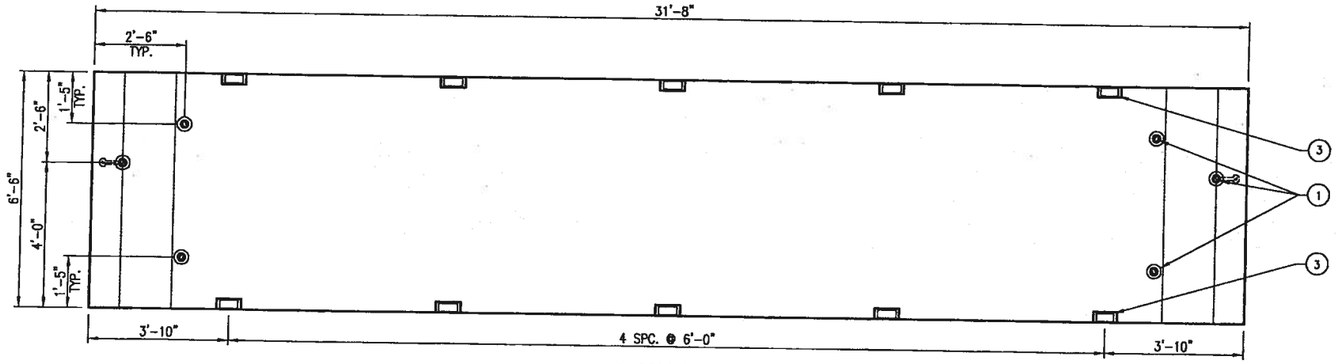

PLAN VIEW
SCALE: 1/4" = 1'-0"

NOTE:
- BRIDGE STRIPPING STRENGTH 4000 PSI CONCRETE MIN. BEFORE STRIPPING .

DESIGN NOTES:

1. DESIGN LOADINGS:
   1.1. AASHTO HS-20-44 W/IMPACT.
   1.2. DEPTH OF OVERBURDEN 0.0' MIN 1.0' MAX.
2. LATERAL LIVE LOAD SURCHARGE PER SPECS.
3. CONCRETE 28 DAY COMPRESSIVE STRENGTH SHALL BE 7000 PSI (MIN).
4. STEEL REINFORCEMENT: REBAR, ASTM A-615 GRADE 60
5. CEMENT: ASTM C-150 SPECIFICATIONS.

INSTALLATION NOTES:

6. FOOTING TO BE LEVEL, COMPACTED SURFACE PROVIDING A MINIMUM 4,000 PSF BEARING CAPACITY.
7. CONTRACTOR SHALL EXCAVATE,BACKFILL, AND COMPACT PER THE LATEST ISPWC CODE.
8. ANY INSTALLATION QUESTIONS SHALL BE DIRECTED TOWARDS OLDCASTLE PRECAST.
9. CONTRACTOR TO FILL ALL POCKETS AND KEYWAYS WITH 4,000 PSI NON SHRINK GROUT.

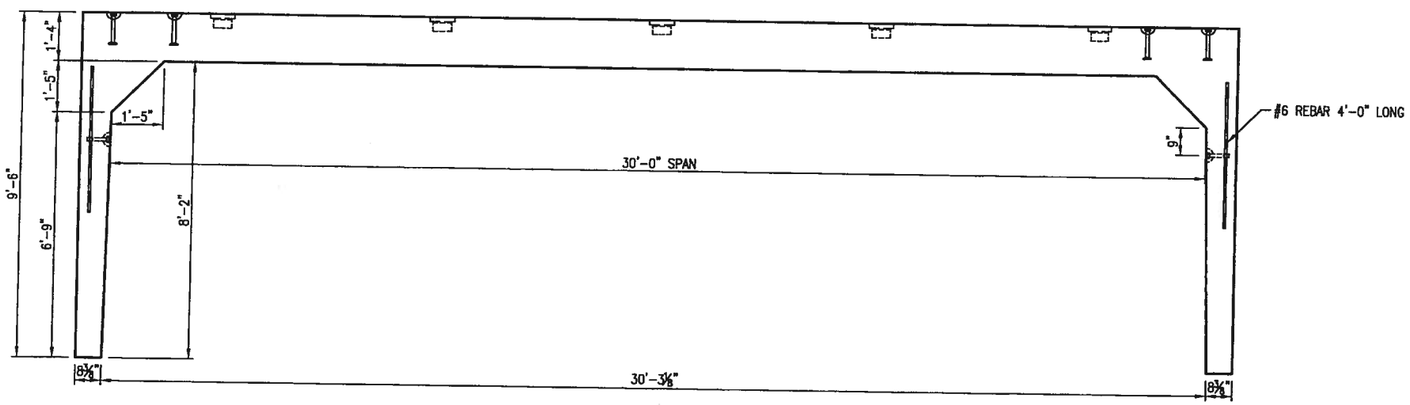

ELEVATION VIEW
SCALE: 1/4" = 1'-0"

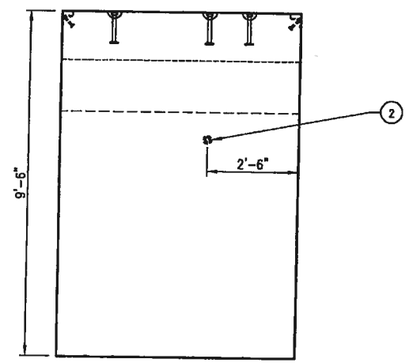

END VIEW
SCALE: 1/4" = 1'-0"

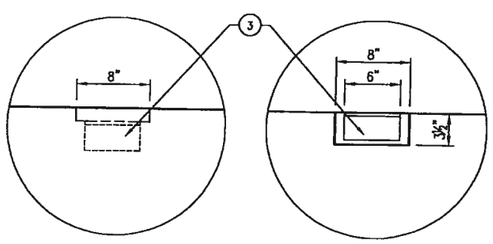

BRIDGE DECK WELD POCKET DETAIL

PART B - BILL OF MATERIALS

#	QTY	DESCRIPTION	AX#
1	6 EA	MB 16T X 10" D.B. LIFTER	7001195
2	2 EA	MB 8T X 7 1/8" D.B. EYE LIFTER	7001190
3	10 EA	3"X3"X⅜" ANGLE 6" LONG W/(2)½"X4" STUD	7003446
	13.713 CYD	PRECAST MIX DESIGN SCC	9002500
	983 LBS	#4 REBAR	8010012
	1030 LBS	#5 REBAR	8010013
	1193 LBS	#6 REBAR	8010014

PRODUCT WEIGHTS

PRODUCT	QTY.	WEIGHT
TYPE B	2	55540

Oldcastle Precast®
2240 YELLOWSTONE HYW IDAHO FALLS, IDAHO 83402
PHONE: (208) 522-8100, FAX: (208) 522-8701

THIS DOCUMENT IS THE PROPERTY OF OLDCASTLE PRECAST, INC. IT IS SUBMITTED FOR REFERENCE PURPOSES ONLY AND SHALL NOT BE USED IN ANY WAY INJURIOUS TO THE INTERESTS OF SAID COMPANY. COPYRIGHT © 2010 OLDCASTLE PRECAST, INC. ALL RIGHTS RESERVED.

PROFESSIONAL ENGINEER
LICENSED
14016
8/26/11
STATE OF IDAHO
MICHAEL P. BLACKHAM

30' SPAN W/STEM WALL FOOTINGS
TYPE B DETAILS
BADGER CREEK BRIDGE

CUSTOMER
TETON COUNTY - IDAHO

DATE	SALES	DRAWN	ENGINEER	CHECKED	SALES ORDER
8/25/11	CE	JWB			144336

DRAWING NUMBER	REVISION	SHEET
230-S144336-001	— REV DATE —	4 OF 9

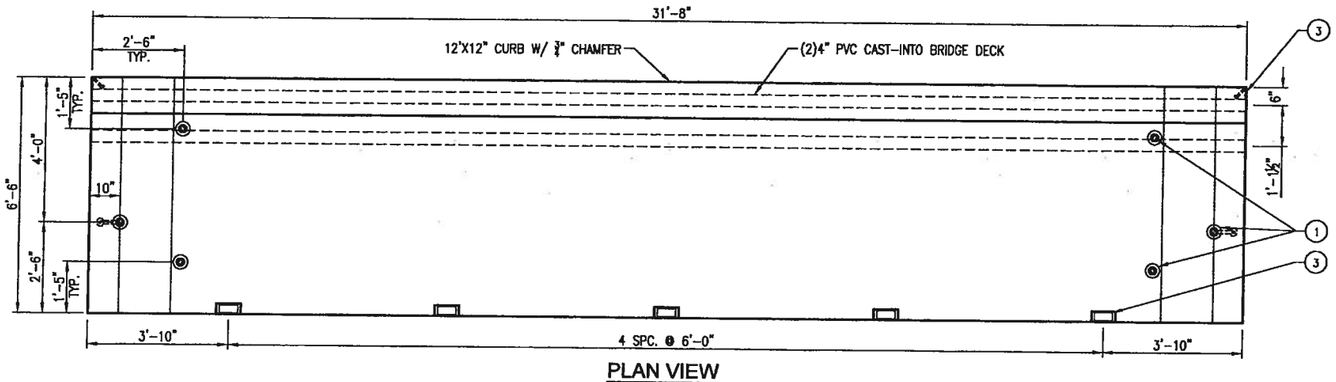

PLAN VIEW
SCALE: 1/4" = 1'-0"

NOTE:
- BRIDGE STRIPPING STRENGTH 4000 PSI CONCRETE MIN. BEFORE STRIPPING .

DESIGN NOTES:

1. DESIGN LOADINGS:
   1.1. AASHTO HS-20-44 W/IMPACT.
   1.2. DEPTH OF OVERBURDEN 0.0' MIN 1.0' MAX.
2. LATERAL LIVE LOAD SURCHARGE PER SPECS.
3. CONCRETE 28 DAY COMPRESSIVE STRENGTH SHALL BE 7000 PSI (MIN).
4. STEEL REINFORCEMENT: REBAR, ASTM A-615 GRADE 60
5. CEMENT: ASTM C-150 SPECIFICATIONS.

INSTALLATION NOTES:

6. FOOTING TO BE LEVEL, COMPACTED SURFACE PROVIDING A MINIMUM 4,000 PSF BEARING CAPACITY.
7. CONTRACTOR SHALL EXCAVATE,BACKFILL, AND COMPACT PER THE LATEST ISPWC CODE.
8. ANY INSTALLATION QUESTIONS SHALL BE DIRECTED TOWARDS OLDCASTLE PRECAST.
9. CONTRACTOR TO FILL ALL POCKETS AND KEYWAYS WITH 4,000 PSI NON SHRINK GROUT.

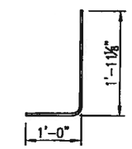

R1 DETAIL

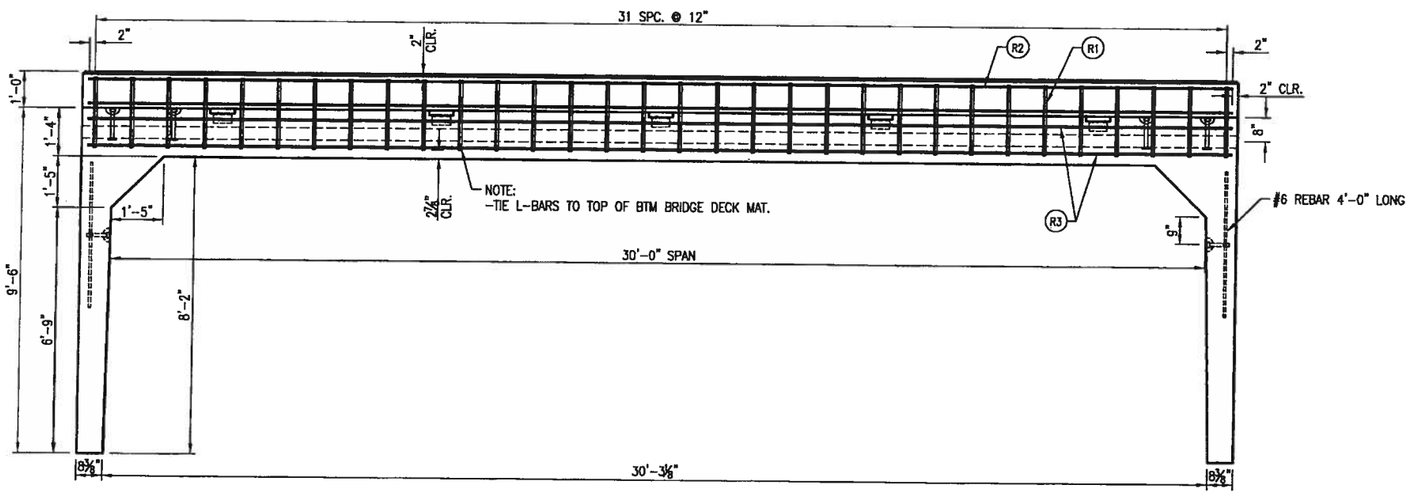

ELEVATION VIEW
(CURB STEEL SHOWN)
SCALE: 1/4" = 1'-0"

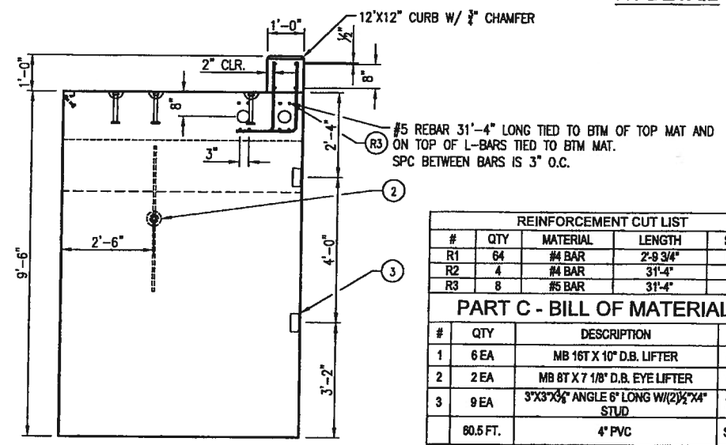

END VIEW
SCALE: 1/4" = 1'-0"

REINFORCEMENT CUT LIST				
#	QTY	MATERIAL	LENGTH	SHAPE
R1	64	#4 BAR	2'-9 3/4"	L BAR
R2	4	#4 BAR	31'-4"	STR
R3	8	#5 BAR	31'-4"	STR

PART C - BILL OF MATERIALS

#	QTY	DESCRIPTION	AX#
1	6 EA	MB 16T X 10" D.B. LIFTER	7001195
2	2 EA	MB 8T X 7 1/8" D.B. EYE LIFTER	7001190
3	9 EA	3"X3"X⅜" ANGLE 6" LONG W/(2)½"X4" STUD	7003446
	60.5 FT.	4" PVC	SPECIAL
	14.886 CYD	PRECAST MIX DESIGN SCC	9002500
	1187 LBS	#4 REBAR	8010012
	1292 LBS	#5 REBAR	8010013
	1193 LBS	#6 REBAR	8010014

PRODUCT WEIGHTS

PRODUCT	QTY.	WEIGHT
TYPE A	2	60290

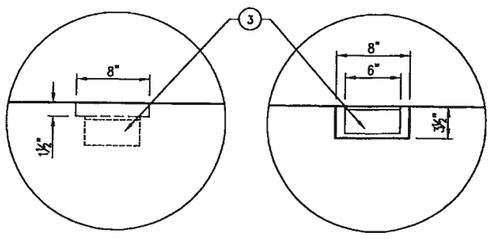

BRIDGE DECK WELD POCKET DETAIL

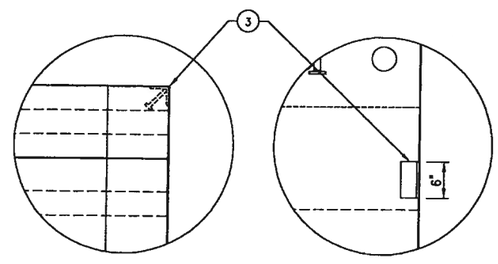

BRIDGE LEG WELD PLATE DETAIL

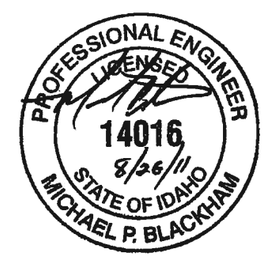

Oldcastle Precast®
2240 YELLOWSTONE HYW IDAHO FALLS, IDAHO 83402
PHONE: (208) 522-9130, FAX: (208) 522-6701

THIS DOCUMENT IS THE PROPERTY OF OLDCASTLE PRECAST, INC. IT IS SUBMITTED FOR REFERENCE PURPOSES ONLY AND SHALL NOT BE USED IN ANY WAY INJURIOUS TO THE INTERESTS OF SAID COMPANY. COPYRIGHT © 2010 OLDCASTLE PRECAST, INC. ALL RIGHTS RESERVED.

30' SPAN W/STEM WALL FOOTINGS
TYPE C DETAILS
BADGER CREEK BRIDGE

CUSTOMER
TETON COUNTY - IDAHO

DATE	SALES	DRAWN	ENGINEER	CHECKED	SALES ORDER
8/25/11	CE	JWB			144336

DRAWING NUMBER	REVISION	SHEET
230-S144336-001	REV DATE	5 OF 9

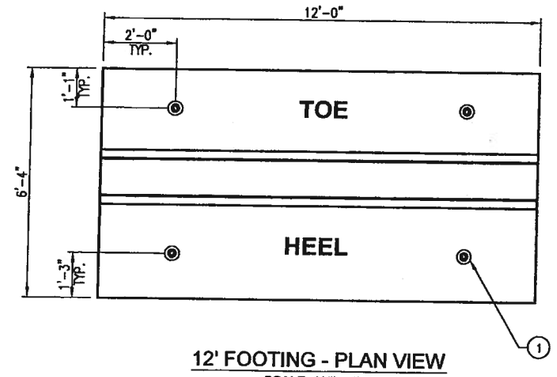

12' FOOTING - PLAN VIEW
SCALE: 1/4" = 1'-0"

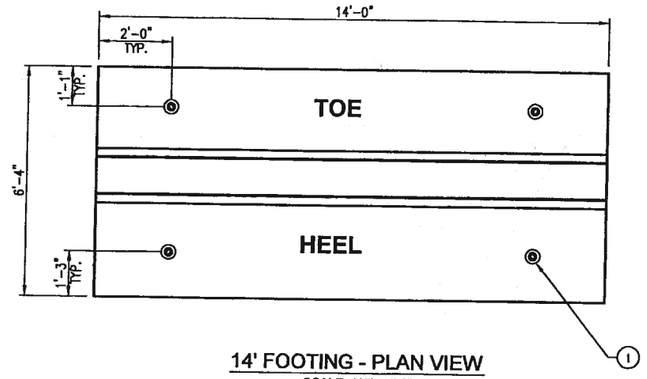

14' FOOTING - PLAN VIEW
SCALE: 1/4" = 1'-0"

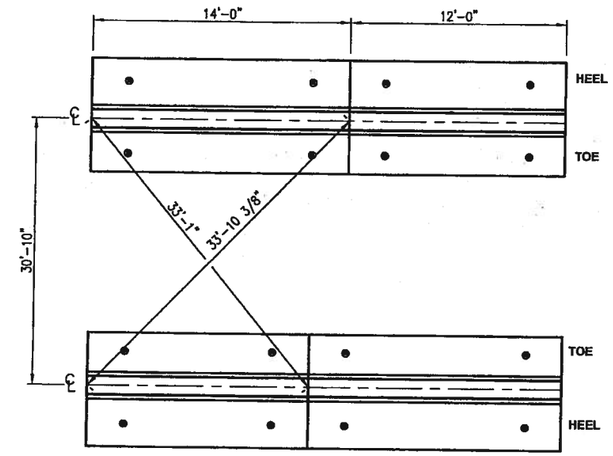

PLAN VIEW
FOOTING LAYOUT
SCALE: 1/8" = 1'-0"

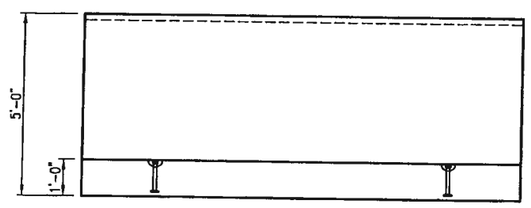

12' FOOTING - ELEVATION VIEW
SCALE: 1/4" = 1'-0"

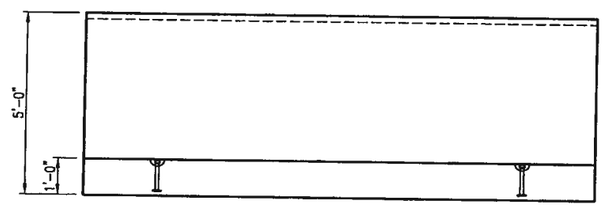

14' FOOTING - ELEVATION VIEW
SCALE: 1/4" = 1'-0"

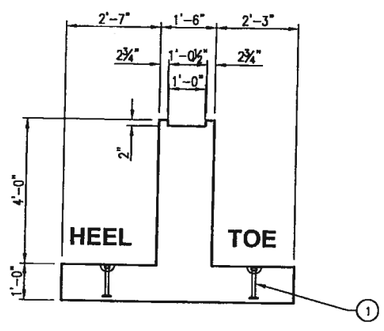

END VIEW
SCALE: 1/4" = 1'-0"

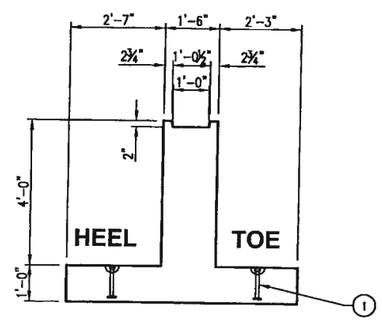

END VIEW
SCALE: 1/4" = 1'-0"

DESIGN NOTES:

1. DESIGN LOADINGS:
   - 1.1. AASHTO HS-20-44 W/IMPACT.
   - 1.2. DEPTH OF OVERBURDEN 0.0' MIN 1.0' MAX.
2. LATERAL LIVE LOAD SURCHARGE PER SPECS.
3. CONCRETE 28 DAY COMPRESSIVE STRENGTH SHALL BE 7000 PSI (MIN).
4. STEEL REINFORCEMENT: REBAR, ASTM A-615 GRADE 60
5. CEMENT: ASTM C-150 SPECIFICATIONS.

INSTALLATION NOTES:

6. FOOTING TO BE LEVEL, COMPACTED SURFACE PROVIDING A MINIMUM 4,000 PSF BEARING CAPACITY.
7. CONTRACTOR SHALL EXCAVATE,BACKFILL, AND COMPACT PER THE LATEST ISPWC CODE.
8. ANY INSTALLATION QUESTIONS SHALL BE DIRECTED TOWARDS OLDCASTLE PRECAST.
9. CONTRACTOR TO FILL ALL POCKETS AND KEYWAYS WITH 4,000 PSI NON SHRINK GROUT.

PROFESSIONAL ENGINEER
LICENSED
14016
8/24/11
STATE OF IDAHO
MICHAEL P. BLACKHAM

12' FOOTING - BILL OF MATERIALS

#	QTY	DESCRIPTION	AX#
1	4 EA	MB 8T X 6¾" D.B. LIFTER	7001180
	5.404 CYD	PRECAST MIX DESIGN SCC	9002500
	224 LBS	#4 REBAR	8010012
	219 LBS	#5 REBAR	8010013

14' FOOTING - BILL OF MATERIALS

#	QTY	DESCRIPTION	AX#
1	4 EA	MB 8T X 6¾" D.B. LIFTER	7001180
	6.304 CYD	PRECAST MIX DESIGN SCC	9002500
	261 LBS	#4 REBAR	8010012
	252 LBS	#5 REBAR	8010013

PRODUCT WEIGHTS

PRODUCT	QTY.	WEIGHT
12' FOOTING	2	21890
14' FOOTING	2	25535

Oldcastle Precast®
2240 YELLOWSTONE HWY IDAHO FALLS, IDAHO 83402
PHONE: (208) 522-6150, FAX: (208) 522-8701

THIS DOCUMENT IS THE PROPERTY OF OLDCASTLE PRECAST, INC. IT IS SUBMITTED FOR REFERENCE PURPOSES ONLY AND SHALL NOT BE USED IN ANY WAY INJURIOUS TO THE INTERESTS OF SAID COMPANY. COPYRIGHT © 2010 OLDCASTLE PRECAST, INC. ALL RIGHTS RESERVED.

30' SPAN W/STEM WALL FOOTINGS
12' & 14' FOOTING DETAILS
BADGER CREEK BRIDGE

CUSTOMER
TETON COUNTY - IDAHO

DATE	SALES	DRAWN	ENGINEER	CHECKED	SALES ORDER
8/25/11	CE	JWB			144336

DRAWING NUMBER	REVISION	SHEET
230-S144336-001	—	6 OF 9
	REV DATE —	

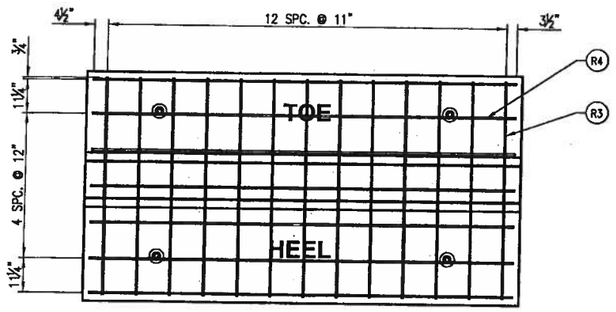

12' FOOTING - PLAN VIEW
TOP MAT STEEL
SCALE: 1/4" = 1'-0"

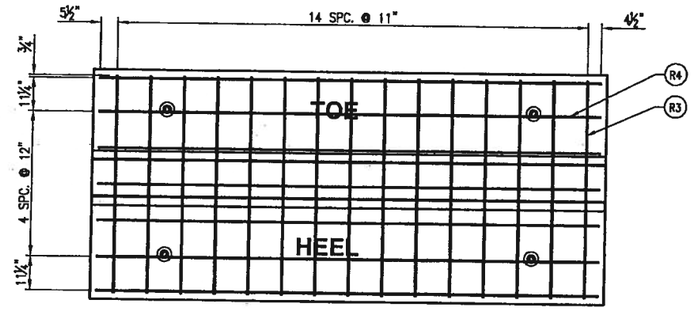

14' FOOTING - PLAN VIEW
TOP MAT STEEL
SCALE: 1/4" = 1'-0"

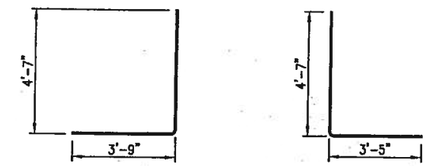

R1 DETAIL

R2 DETAIL

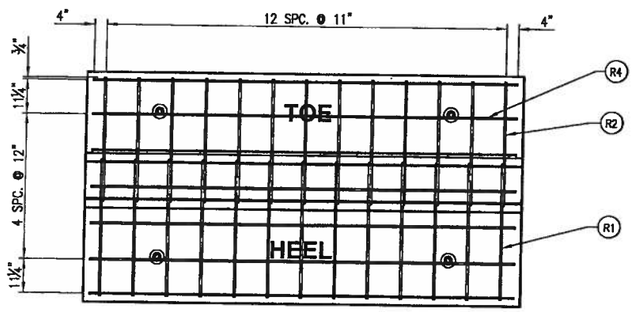

12' FOOTING - PLAN VIEW
BTM MAT STEEL
SCALE: 1/4" = 1'-0"

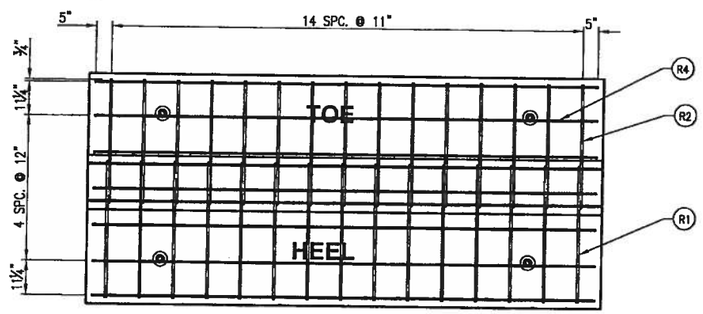

14' FOOTING - PLAN VIEW
BTM MAT STEEL
SCALE: 1/4" = 1'-0"

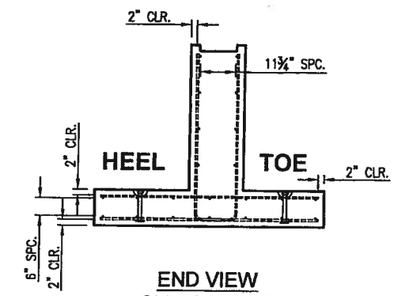

END VIEW
CLEARANCES
SCALE: 1/4" = 1'-0"

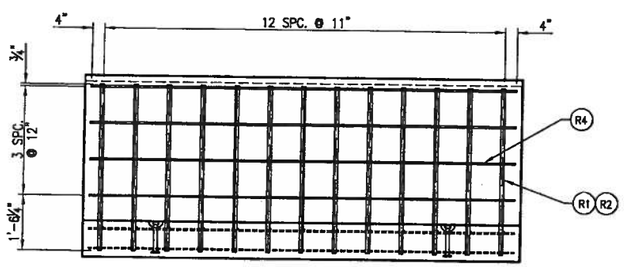

12' FOOTING - ELEVATION VIEW
STEEL
SCALE: 1/4" = 1'-0"

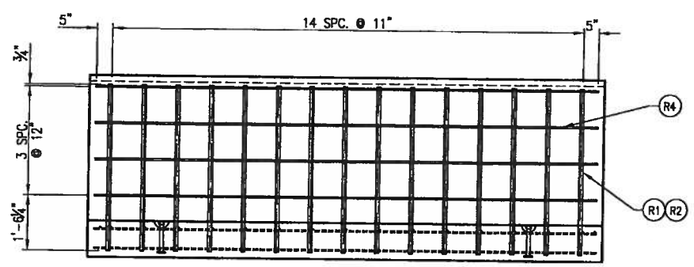

14' FOOTING - ELEVATION VIEW
STEEL
SCALE: 1/4" = 1'-0"

PROFESSIONAL ENGINEER
LICENSED
14016
8/26/11
STATE OF IDAHO
MICHAEL P. BLACKHAM

STEEL WEIGHT

PRODUCT	MATERIAL	WEIGHT
14' FOOTING	#4/GRD60	261
14' FOOTING	#5/GRD60	252

14' FOOTING - REINFORCEMENT CUT LIST

#	QTY	MATERIAL	LENGTH	SHAPE
R1	15	#5 BAR	8'-2 1/2"	L BAR
R2	15	#5 BAR	7'-10 1/2"	L BAR
R3	15	#4 BAR	6'-0"	STR
R4	22	#4 BAR	13'-8"	STR

STEEL WEIGHT

PRODUCT	MATERIAL	WEIGHT
12' FOOTING	#4/GRD60	224
12' FOOTING	#5/GRD60	219

12' FOOTING - REINFORCEMENT CUT LIST

#	QTY	MATERIAL	LENGTH	SHAPE
R1	13	#5 BAR	8'-2 1/2"	L BAR
R2	13	#5 BAR	7'-10 1/2"	L BAR
R3	13	#4 BAR	6'-0"	STR
R4	22	#4 BAR	11'-8"	STR

Oldcastle Precast®
2240 YELLOWSTONE HYW IDAHO FALLS, IDAHO 83402
PHONE: (208) 522-8150, FAX: (208) 522-9701

THIS DOCUMENT IS THE PROPERTY OF OLDCASTLE PRECAST, INC. IT IS SUBMITTED FOR REFERENCE PURPOSES ONLY AND SHALL NOT BE USED IN ANY WAY INJURIOUS TO THE INTERESTS OF SAID COMPANY. COPYRIGHT © 2010 OLDCASTLE PRECAST, INC. ALL RIGHTS RESERVED.

30' SPAN W/STEM WALL FOOTINGS
12' & 14' FOOTING STEEL DETAILS
BADGER CREEK BRIDGE

CUSTOMER
TETON COUNTY - IDAHO

DATE	SALES	DRAWN	ENGINEER	CHECKED	SALES ORDER
8/25/11	CE	JWB			144336

DRAWING NUMBER	REVISION	SHEET
230-S144336-001	— REV DATE —	7 OF 9

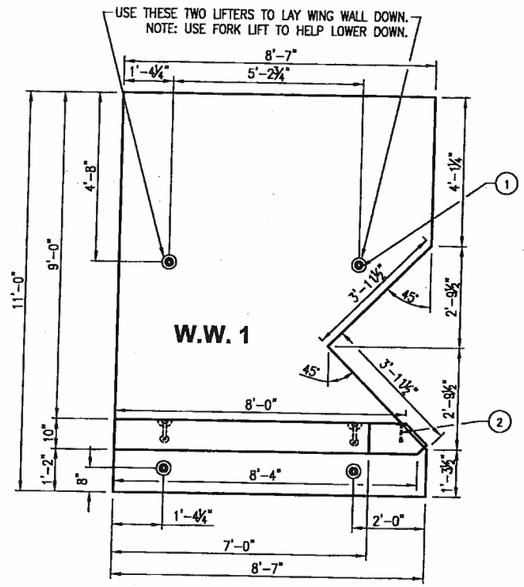

W.W. 1 - PLAN VIEW
SCALE: 1/4" = 1'-0"

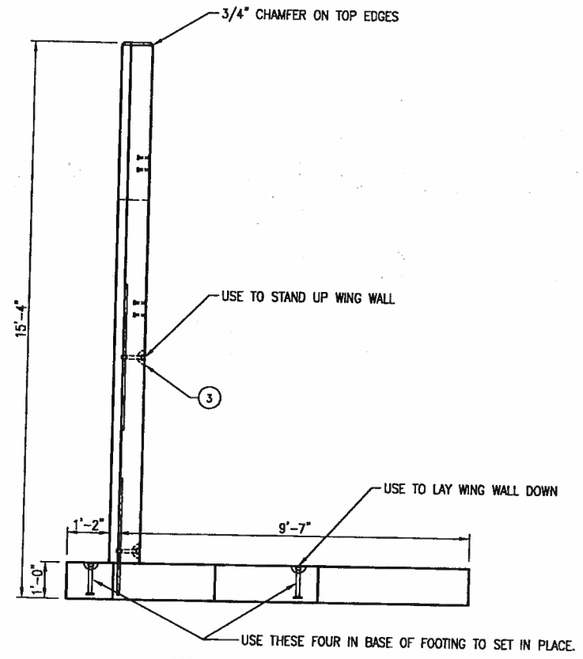

W.W. 1 - END VIEW
SCALE: 1/4" = 1'-0"

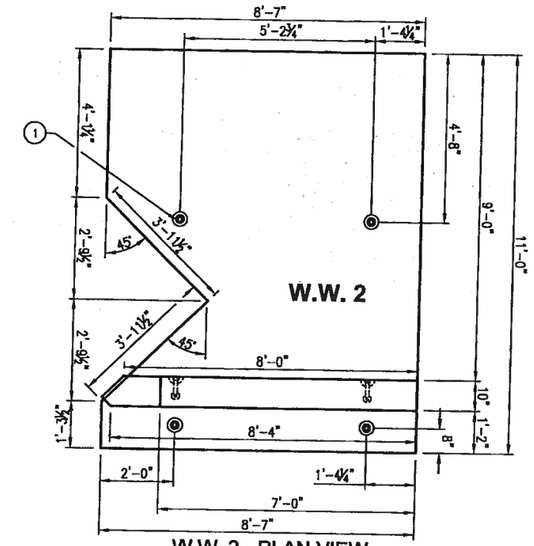

W.W. 2 - PLAN VIEW
SCALE: 1/4" = 1'-0"

DESIGN NOTES:

1. DESIGN LOADINGS:
   - 1.1. AASHTO HS-20-44 W/IMPACT.
   - 1.2. DEPTH OF OVERBURDEN 0.0' MIN 1.0' MAX.
2. LATERAL LIVE LOAD SURCHARGE PER SPECS.
3. CONCRETE 28 DAY COMPRESSIVE STRENGTH SHALL BE 7000 PSI (MIN).
4. STEEL REINFORCEMENT: REBAR, ASTM A-615 GRADE 60
5. CEMENT: ASTM C-150 SPECIFICATIONS.

INSTALLATION NOTES:

6. FOOTING TO BE LEVEL, COMPACTED SURFACE PROVIDING A MINIMUM 4,000 PSF BEARING CAPACITY.
7. CONTRACTOR SHALL EXCAVATE,BACKFILL, AND COMPACT PER THE LATEST ISPWC CODE.
8. ANY INSTALLATION QUESTIONS SHALL BE DIRECTED TOWARDS OLDCASTLE PRECAST.
9. CONTRACTOR TO FILL ALL POCKETS AND KEYWAYS WITH 4,000 PSI NON SHRINK GROUT.

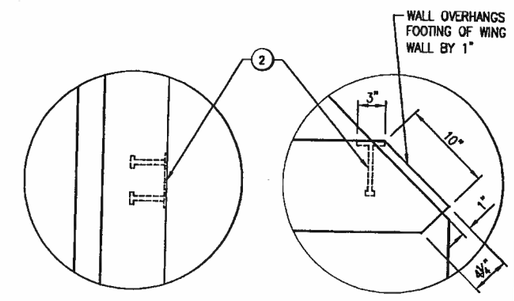

W.W. WELD PLATE DETAIL

USE THESE TOP TWO LIFTERS IN WALL TO STAND WALL UP.
USE ALL FOUR LIFTERS IN WALL TO LOAD AND UNLOAD TRUCK.

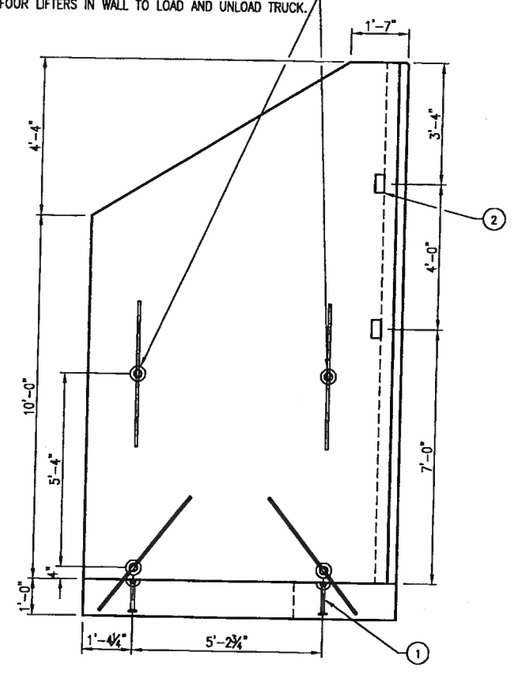

W.W. 1 - ELEVATION VIEW
SCALE: 1/4" = 1'-0"

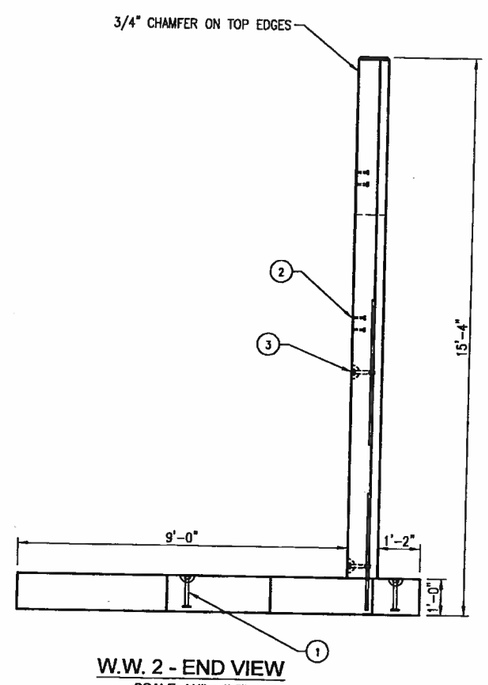

W.W. 2 - END VIEW
SCALE: 1/4" = 1'-0"

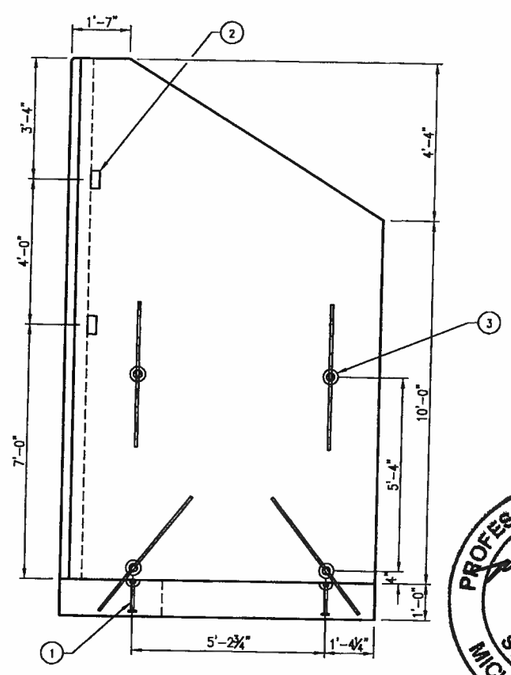

W.W. 2 - ELEVATION VIEW
SCALE: 1/4" = 1'-0"

PROFESSIONAL ENGINEER
LICENSED
14016
8/26/11
STATE OF IDAHO
MICHAEL P. BLACKHAM

W.W. 1 & W.W. 2 - B.O.M

#	QTY	DESCRIPTION	AX#
1	4 EA	MB 8T X 10" D.B. LIFTER	7001185
2	2 EA	3"X3"X⅜" ANGLE 6" LONG W/(2)½"X4" STUD	7003446
3	4 EA	MB 8T X 7 1/8" EYE D.B. LIFTER	7001190
	6.351 CYD	PRECAST MIX DESIGN SCC	9002500
	332 LBS	#4 REBAR	8010012
	494 LBS	#7 REBAR	8010017
	400 LBS	#8 REBAR	8010018

PRODUCT WEIGHTS

PRODUCT	QTY.	WEIGHT
W.W. 1	2	25725
W.W. 2	2	25725

Oldcastle Precast®
2240 YELLOWSTONE HYW IDAHO FALLS, IDAHO 83402
PHONE: (208) 522-6150, FAX: (208) 522-8701

THIS DOCUMENT IS THE PROPERTY OF OLDCASTLE PRECAST, INC. IT IS SUBMITTED FOR REFERENCE PURPOSES ONLY AND SHALL NOT BE USED IN ANY WAY INJURIOUS TO THE INTERESTS OF SAID COMPANY. COPYRIGHT © 2010 OLDCASTLE PRECAST, INC. ALL RIGHTS RESERVED.

30' SPAN W/STEM WALL FOOTINGS
WINGWALL DETAILS
BADGER CREEK BRIDGE

CUSTOMER
TETON COUNTY - IDAHO

DATE	SALES	DRAWN	ENGINEER	CHECKED	SALES ORDER
8/25/11	CE	JWB			144336

DRAWING NUMBER	REVISION	SHEET
230-S144336-001	—	8 OF 9
	REV DATE —	

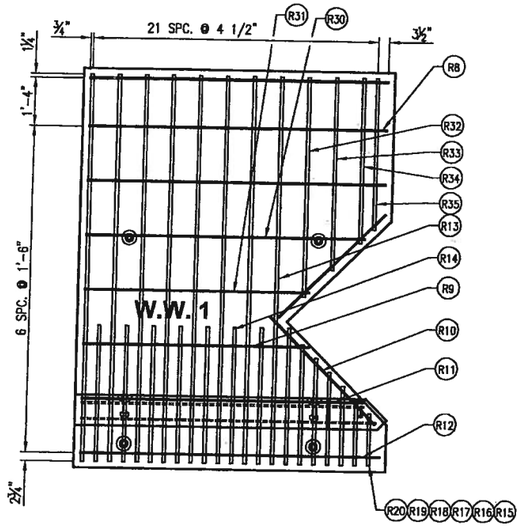

W.W. 1 - PLAN VIEW
TOP MAT STEEL
SCALE: 1/4" = 1'-0"

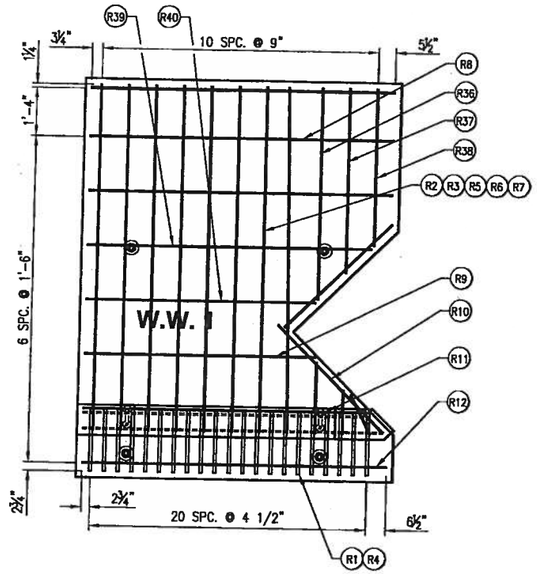

W.W. 1 - PLAN VIEW
BTM MAT STEEL
SCALE: 1/4" = 1'-0"

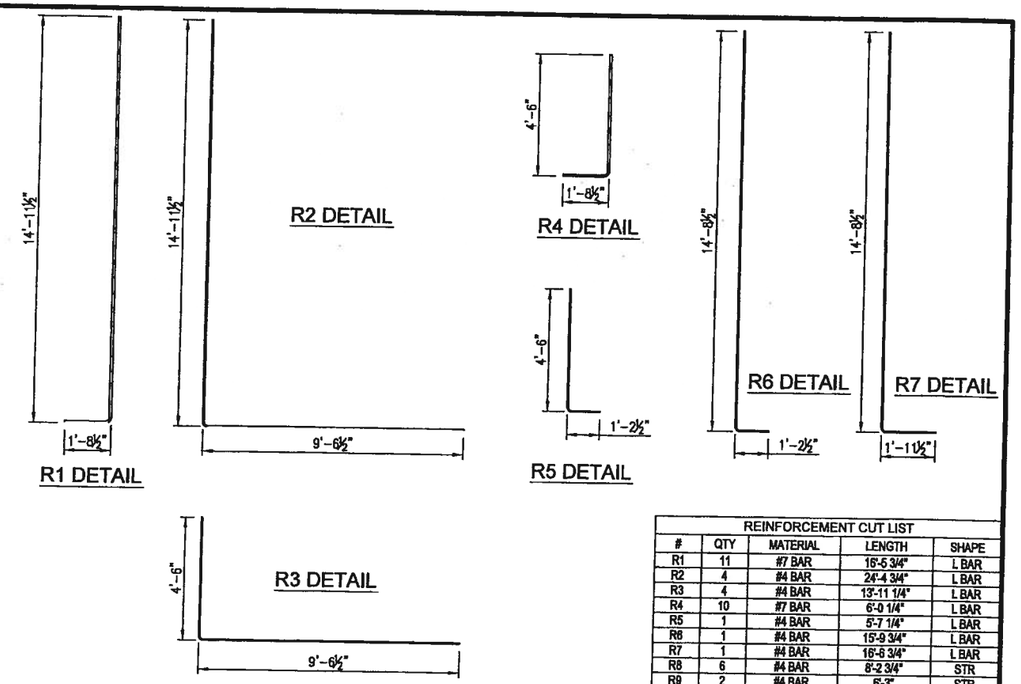

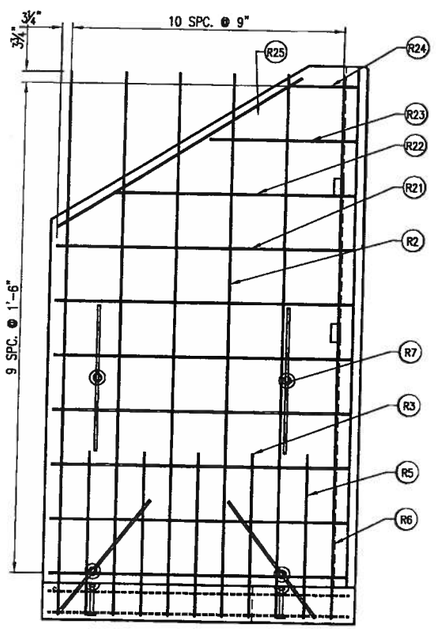

W.W. 1 - ELEVATION VIEW
FRONT MAT STEEL
SCALE: 1/4" = 1'-0"

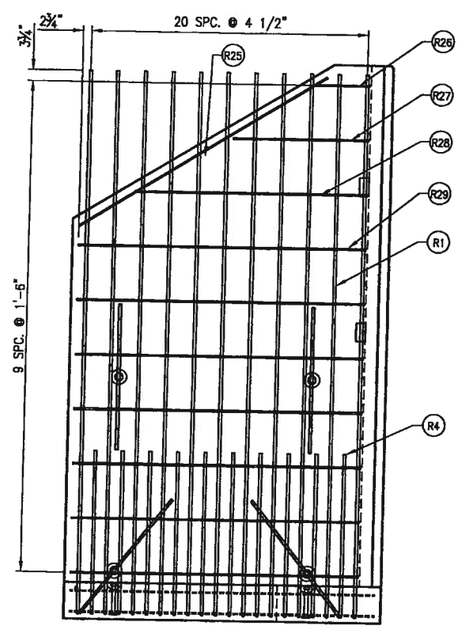

W.W. 1 - ELEVATION VIEW
BACK MAT STEEL
SCALE: 1/4" = 1'-0"

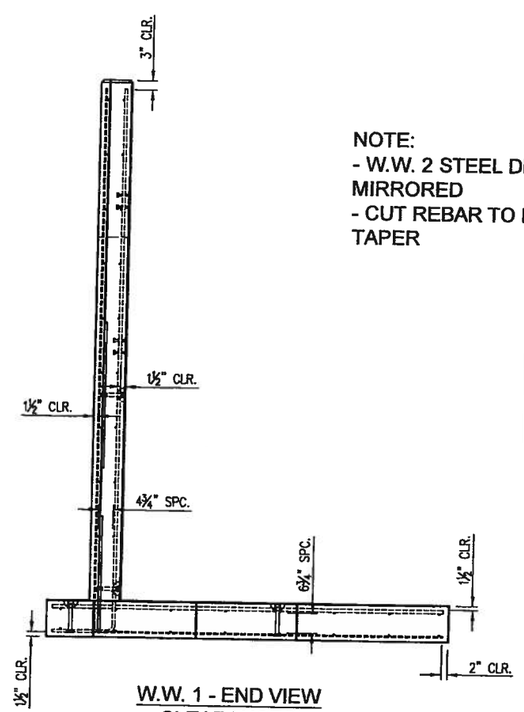

W.W. 1 - END VIEW
CLEARANCES
SCALE: 1/4" = 1'-0"

NOTE:
- W.W. 2 STEEL DESIGN SAME JUST MIRRORED
- CUT REBAR TO FIT WING WALL TAPER

STEEL WEIGHT		
PRODUCT	MATERIAL	WEIGHT
W.W.	#4/GRD60	332
W.W.	#7/GRD60	494
W.W.	#8/GRD60	400

REINFORCEMENT CUT LIST				
#	QTY	MATERIAL	LENGTH	SHAPE
R1	11	#7 BAR	16'-5 3/4"	L BAR
R2	4	#4 BAR	24'-4 3/4"	L BAR
R3	4	#4 BAR	13'-11 1/4"	L BAR
R4	10	#7 BAR	6'-0 1/4"	L BAR
R5	1	#4 BAR	5'-7 1/4"	L BAR
R6	1	#4 BAR	15'-9 3/4"	L BAR
R7	1	#4 BAR	16'-8 3/4"	L BAR
R8	6	#4 BAR	8'-2 3/4"	STR
R9	2	#4 BAR	6'-3"	STR
R10	4	#4 BAR	4'-1 3/4"	STR
R11	2	#4 BAR	7'-9 1/2"	STR
R12	2	#4 BAR	8'-3"	STR
R13	8	#8 BAR	10'-8"	STR
R14	8	#8 BAR	3'-9"	STR
R15	1	#8 BAR	3'-3 3/4"	STR
R16	1	#8 BAR	2'-11 1/4"	STR
R17	1	#8 BAR	2'-6 3/4"	STR
R18	1	#8 BAR	2'-2 1/4"	STR
R19	1	#8 BAR	1'-9 1/2"	STR
R20	1	#8 BAR	1'-5 1/4"	STR
R21	7	#4 BAR	8'-1 1/2"	STR
R22	1	#4 BAR	6'-7 1/4"	STR
R23	1	#4 BAR	3'-11 3/4"	STR
R24	1	#4 BAR	1'-9 1/2"	STR
R25	2	#4 BAR	7'-10"	STR
R26	1	#4 BAR	1'-5 1/4"	STR
R27	1	#4 BAR	3'-7 3/4"	STR
R28	1	#4 BAR	6'-3 1/4"	STR
R29	7	#4 BAR	7'-9 1/2"	STR
R30	1	#4 BAR	7'-8 1/2"	STR
R31	1	#4 BAR	6'-2 1/2"	STR
R32	1	#8 BAR	6'-0 3/4"	STR
R33	1	#8 BAR	5'-3 3/4"	STR
R34	1	#8 BAR	4'-6 3/4"	STR
R35	1	#8 BAR	4'-2 1/4"	STR
R36	1	#4 BAR	5'-10 1/4"	STR
R37	1	#4 BAR	5'-1 1/4"	STR
R38	1	#4 BAR	4'-4 1/4"	STR
R39	1	#4 BAR	7'-8 1/2"	STR
R40	1	#4 BAR	6'-2 1/2"	STR

PROFESSIONAL ENGINEER
LICENSED
14016
6/26/16
STATE OF IDAHO
MICHAEL P. BLACKHAM

Oldcastle Precast®
2340 YELLOWSTONE HYW IDAHO FALLS, IDAHO 83402
PHONE: (208) 522-8150, FAX: (208) 522-6701

THIS DOCUMENT IS THE PROPERTY OF OLDCASTLE PRECAST, INC. IT IS SUBMITTED FOR REFERENCE PURPOSES ONLY AND SHALL NOT BE USED IN ANY WAY INJURIOUS TO THE INTERESTS OF SAID COMPANY. COPYRIGHT © 2010 OLDCASTLE PRECAST, INC. ALL RIGHTS RESERVED.

30' SPAN W/STEM WALL FOOTINGS
WINGWALL STEEL DETAILS
BADGER CREEK BRIDGE

CUSTOMER
TETON COUNTY - IDAHO

DATE	SALES	DRAWN	ENGINEER	CHECKED	SALES ORDER
8/25/11	CE	JWB			144336

DRAWING NUMBER	REVISION	SHEET
230-S144336-001	— REV DATE —	9 OF 9

DESIGN DRAWINGS

BADGER CREEK STABILIZATION PROJECT
BADGER CREEK ROAD (W 10000 N)
TETON COUNTY, IDAHO

DRAWING INDEX

TL-1 TITLE SHEET
SP-1 SITE DESIGN
DT-1 CROSS VANE
DT-2 J-HOOK VANE AND ROCK BARB
DT-3 ROCK BARB AND BIOENGINEERING
DT-4 ROOT WAD/LOG REVETMENT

PREPARED FOR:

Teton County Engineering Department

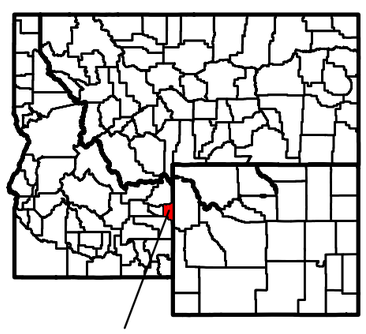

Teton County, Idaho

PREPARED BY:

research & consulting inc.
Biota
PO Box 8578, 140 E. Broadway, Suite 23
Jackson, WY 83002

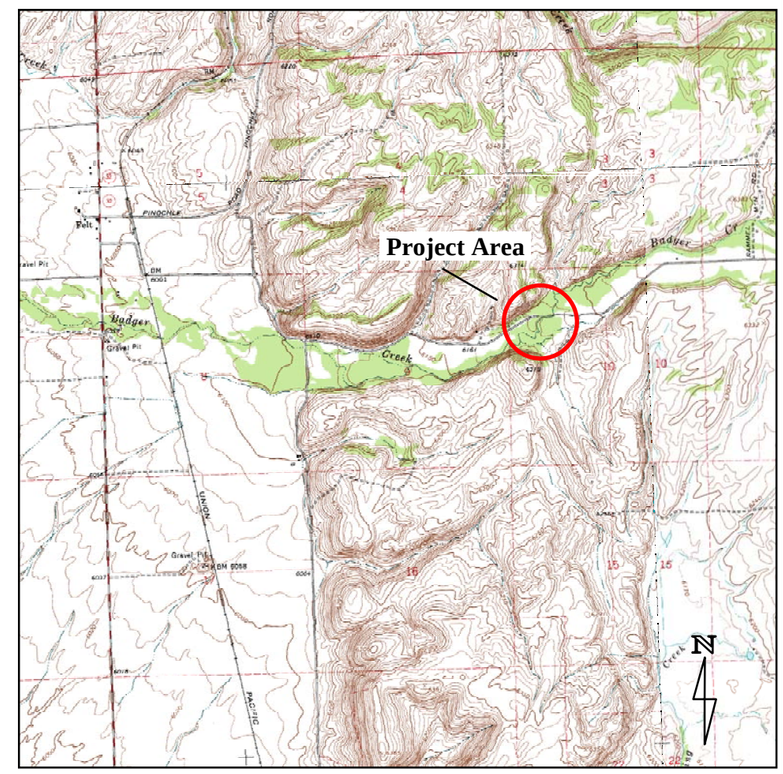

Project Vicinity Map
USGS Quad: Tetonia, ID
Scale: 1 inch = 4,000 feet

research & consulting inc.
Biota
PO Box 8578, 140 E. Broadway, Suite 23
Jackson, WY 83002; ph: 307-733-4216

TITLE SHEET

Badger Creek Stabilization Project
Badger Creek Road (W 10000 N)
Teton County, Idaho

No: 1
Date: 7/9/12
Description: Design Drawings

Drawing:

TL-1

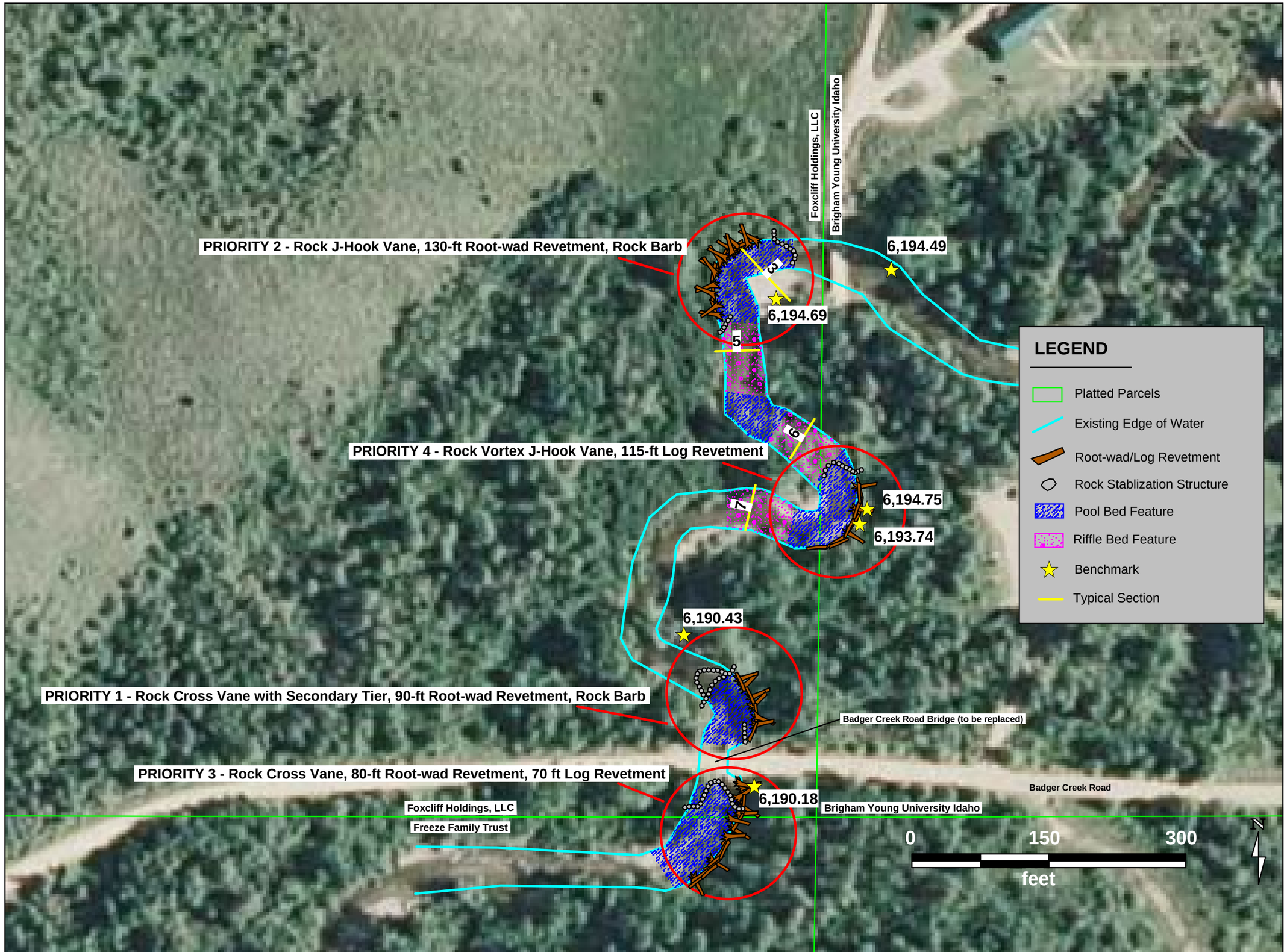

research & consulting inc.
Biota
PO Box 8578, 140 E. Broadway, Suite 23
Jackson, WY 83002; ph: 307-733-4216

SITE PLAN

Badger Creek Stabilization Project
Badger Creek Road (W 10000 N)
Teton County, Idaho

No: 1
Date: 7/9/12
Description: DesignDrawings

Drawing:

SP-1

PLAN VIEW

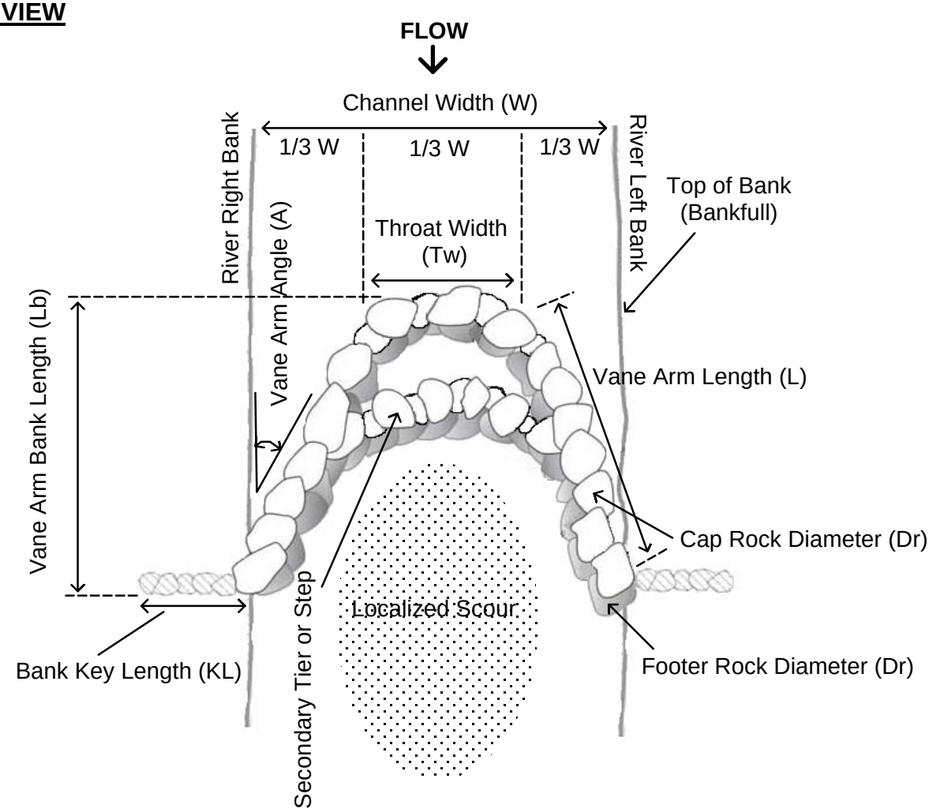

PROFILE VIEW

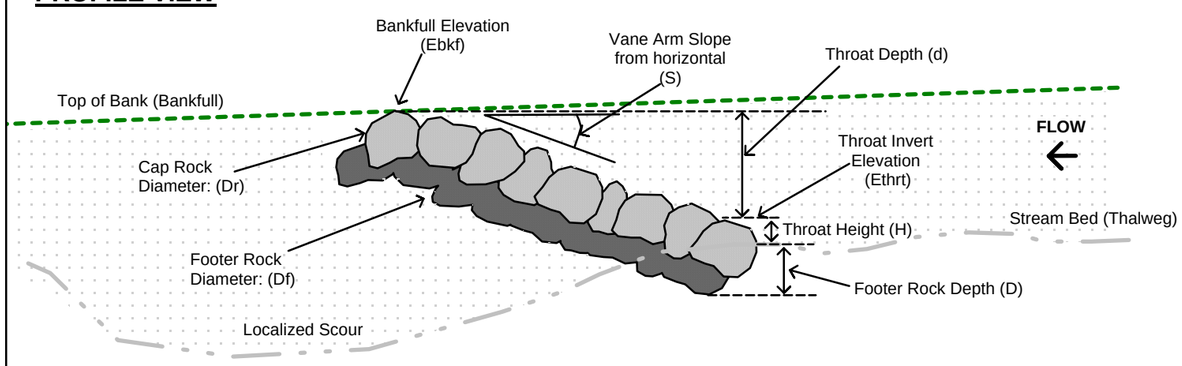

Code	Description	Priority 1 Structure	Priority 3 Structure
W	Channel Width	48	48
Tw	Throat Width	16	16
Ethrt	Throat Invert Elevation	6185.6	6184.456
Ethrt2	Secondary Tier Elevation	6184.6	n/a
L	Vane Arm Length	32 ft	32 ft
Lb	Vane Arm Bank Length	27.7 ft	27.7 ft
S	Vane Arm Slope	3%	7%
A	Vane Arm Angle	30 deg	30 deg
Ebkf	Bankfull Elevation	6187.67	6186.56
Kl	Bank Key Length	10 ft	10 ft
Dr	Cap Rock Diameter	>2.5 ft	>2.5 ft
Df	Footer Rock Diameter	>2.5 ft	>2.5 ft
D	Footer Rock Depth	3 ft	3 ft
	Boulders to Build Structure	104	72

Work Description:

Rock cross vane installation includes site preparations necessary to install complete structures at locations listed on sheets SP-1.
Contractor shall install the structures as specified on sheet DT-1, unless alterations are approved by the design consultant. All materials for rock cross vane structures are identified and shall meet the specifications listed on sheet DT-1.

Groundwater dewatering may be required for structure installation. Dewatering discharge, if required, shall be directed to a settling basin approved by the design consultant. Contractor shall use BMPs as approved by design consultant.

Design consultant shall identify and mark the construction location for each rock cross vane structure prior to construction.

Contractor shall use boulders of specified dimensions as shown on sheet DT-1. Finish elevations, dimensions, and slopes shall be as specified on sheet DT-1, unless modifications are approved by the design consultant. Cap rocks shall be placed on top of footer rocks. Lateral spacing between adjacent boulders (cap or footer) shall be zero; boulders shall be securely touching. Design consultant shall inspect materials and final elevations of the structure prior to contractor commencing construction of final channel grading and backfill.

research & consulting inc.
Biota
PO Box 8578, 140 E. Broadway, Suite 23
Jackson, WY 83002; ph: 307-733-4216

DETAIL SHEET -- ROCK CROSS VANE

Badger Creek Stabilization Project
Badger Creek Road (W 10000 N)
Teton County, Idaho

No: 1
Date: 7/9/12
Description: Design Drawings

Drawing:

DT-1

PLAN VIEW

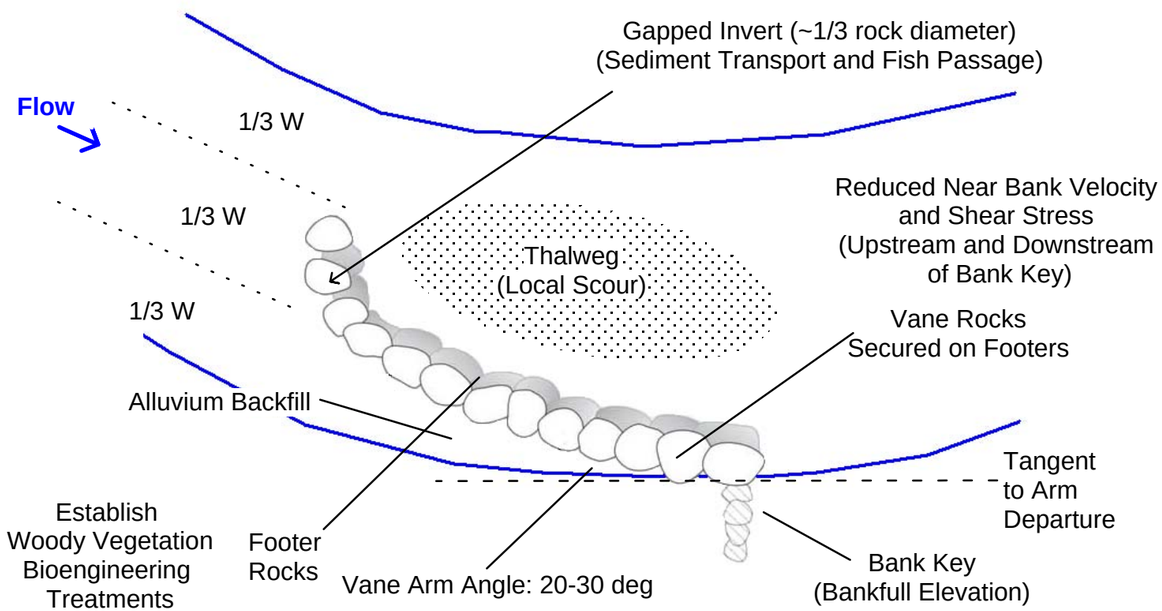

Code	Description	Priority 2 Structure	Priority 4 Structure
W	Channel Width	48	48
Tw	Throat Width	16	16
Ethrt	Throat Invert Elevation	6192.32	6189.47
L	Vane Arm Length	32 ft	32 ft
S	Vane Arm Slope	5%	5%
A	Vane Arm Angle	30 deg	30 deg
Ebkf	Bankfull Elevation	6194.424	6191.57
Kl	Bank Key Length	10 ft	10 ft
Dr	Cap Rock Diameter	>2.5 ft	>2.5 ft
Df	Footer Rock Diameter	>2.5 ft	>2.5 ft
D	Footer Rock Depth	3 ft	3 ft
	Boulders to Build Structure	39	39

PROFILE VIEW

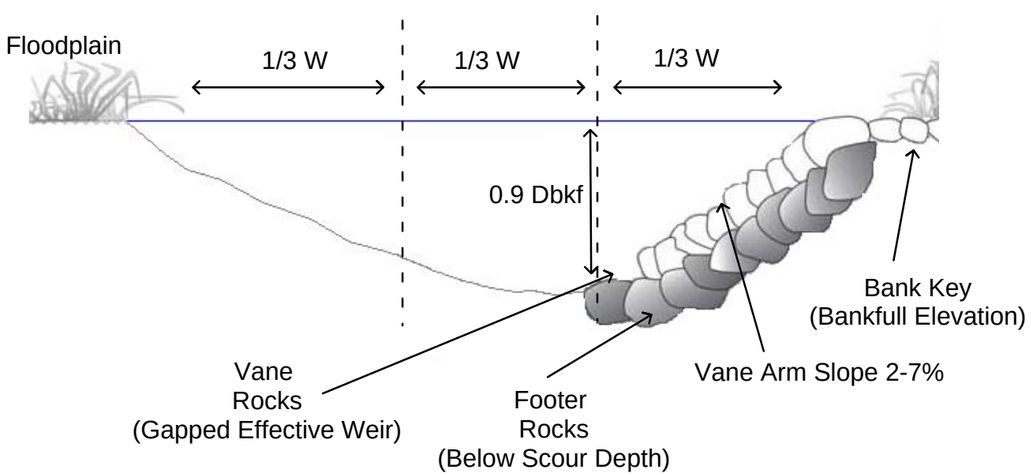

Work Description:

Rock J-Hook Vane installation includes site preparations necessary to install complete structures at locations listed on sheets SP-1. Contractor shall install the structures as specified on sheet DT-2, unless alterations are approved by the design consultant. All materials for J-Hook Vane structures are identified and shall meet the specifications listed on sheet DT-2.

Groundwater dewatering may be required for structure installation. Dewatering discharge, if required, shall be directed to a settling basin approved by the design consultant. Contractor shall employ BMPs as approved by design consultant.

Design consultant shall identify and mark the construction location for each J-Hook Vane structure prior to construction.

Contractor shall use boulders of specified dimensions as shown on sheet DT-2. Finish elevations, dimensions, and slopes shall be as specified on sheet DT-2, unless modifications are approved by the design consultant. Cap rocks shall be placed on top of footer rocks. Vortex vanes shall have lateral spacing between cap throat rocks equal to 1/3 rock diameter, footer rocks shall not be gapped. Non-vortex vanes shall have lateral spacing between adjacent boulders of zero; boulders shall be securely touching. Design consultant shall inspect materials and final elevations of the structure prior to contractor commencing construction of final channel grading and backfill.

Biota research & consulting inc.
PO Box 8578, 140 E. Broadway, Suite 23
Jackson, WY 83002; ph: 307-733-4216

DETAIL SHEET ROCK J-HOOK VANE

Badger Creek Stabilization Project
Badger Creek Road (W 10000 N)
Teton County, Idaho

No: 1
Date: 7/9/12
Description: Design Drawings

Drawing:

DT-2

PLAN VIEW

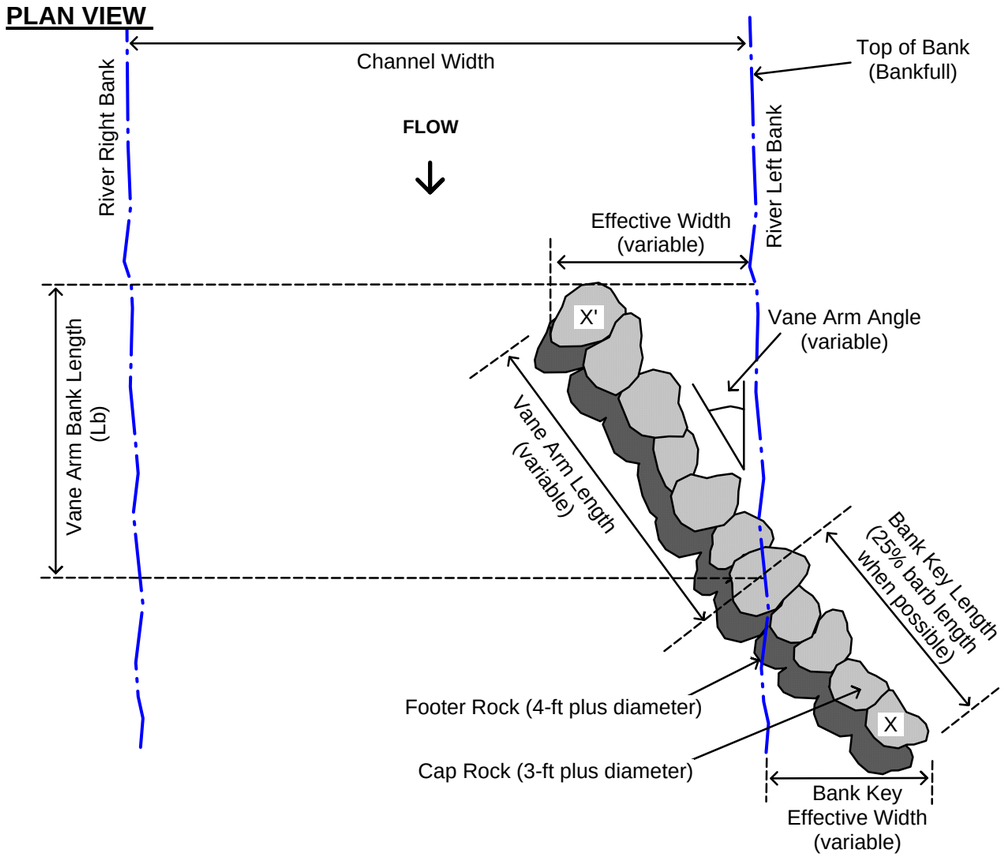

Code	Description	Priority 1 Structure	Priority 2 Structure
Ebkfl	Bankfull Elevation	6186.99	6193.2
S	Barb Slope	5%	5%
A	Vane Arm Angle	25 deg	25 deg
L	Vane Arm Length	35 ft	35 ft
Ew	Vane Arm Effective Width	15 ft	15 ft
Kl	Bank Key Length	12 ft	12 ft
Dr	Cap Rock Diameter	>2.5 ft	>2.5 ft
Df	Footer Rock Diameter	>2.5 ft	>2.5 ft
D	Footer Rock Depth	3 ft	3 ft
	Boulders to Build Structure	33	33

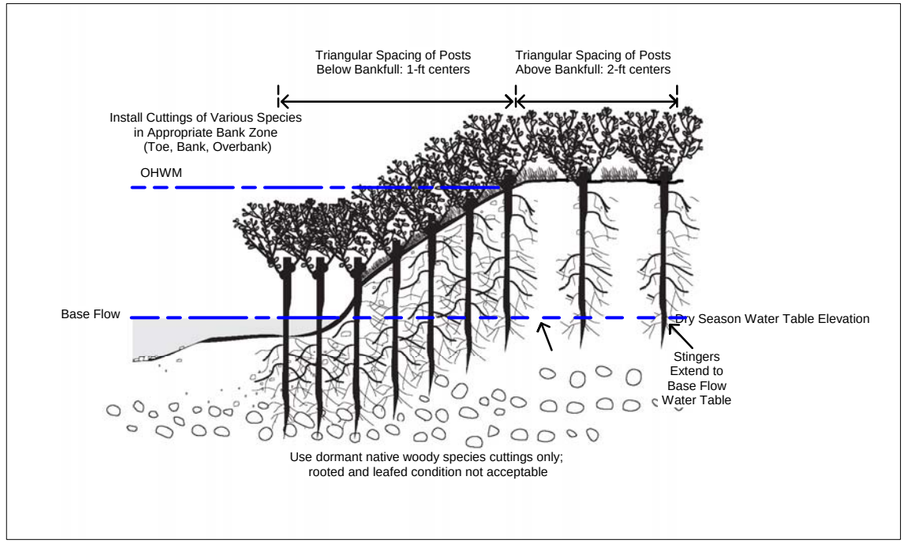

PROFILE VIEW X to X'

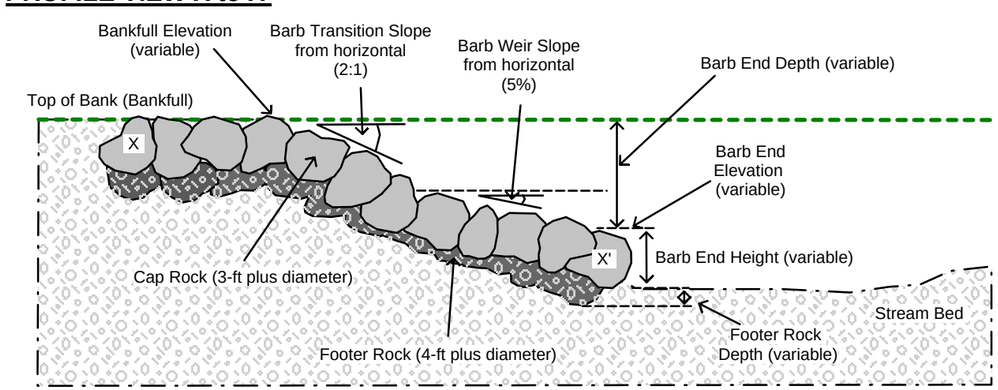

Work Description:

Rock barb installation includes preparatory work and operations necessary to install complete structures at locations listed on sheets SP-1. Contractor shall install the structures as specified on sheet DT-3, unless alterations are approved by the design consultant. All materials for rock barb structures are identified and shall meet the specifications listed on sheet DT-3.

Design consultant shall survey and mark the construction location for each barb structure prior to construction.

Groundwater dewatering may be required for structure installation. Dewatering discharge, if required, shall be directed to a settling basin approved by the design consultant. Contractor shall install BMPs as approved by design consultant.

Contractor shall use boulders with specified dimensions as shown on sheet DT-3. Finish elevations, dimensions, and slopes shall be as specified on sheet DT-3, unless modifications are approved by the design consultant. Cap rocks shall be placed on top of footer rocks. Lateral spacing between adjacent boulders shall be negligible; boulders shall be securely touching. Design consultant shall inspect materials and final elevations of the structure prior to contractor commencing construction of final channel grading and backfill.

research & consulting inc.
Biota
PO Box 8578, 140 E. Broadway, Suite 23
Jackson, WY 83002; ph: 307-733-4216

DETAIL SHEET -- ROCK BARB & BIOENGINEERING

Badger Creek Stabilization Project
Badger Creek Road (W 10000 N)
Teton County, Idaho

No: 1
Date: 7/9/12
Description: Design Drawings

Drawing:

DT-3

TYPE 1 PLAN VIEW

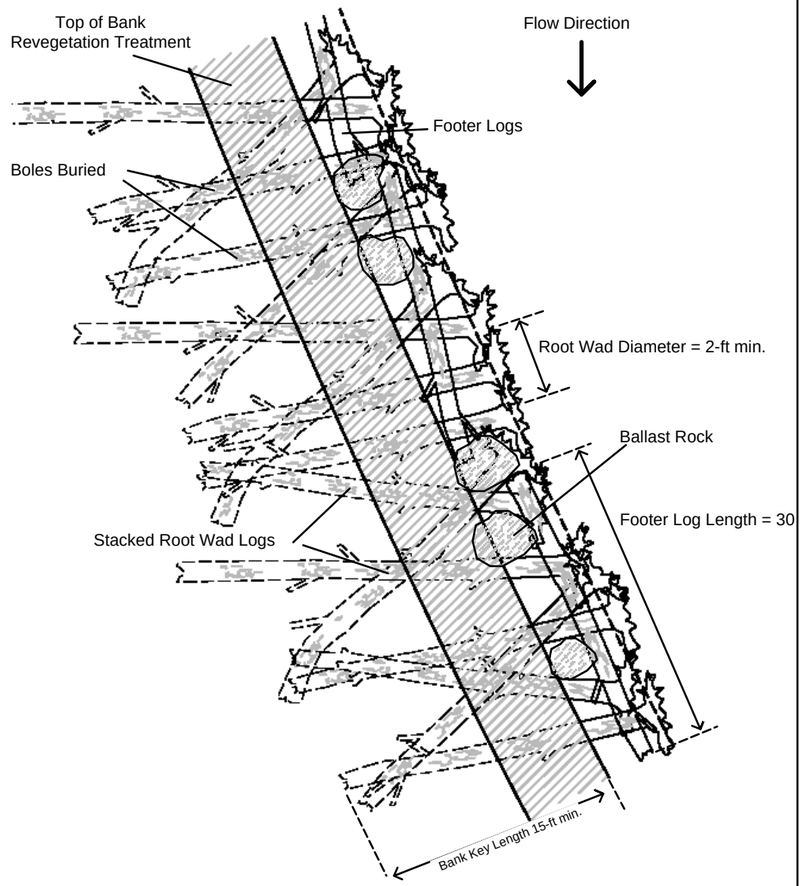

TYPE 2 SECTION VIEW

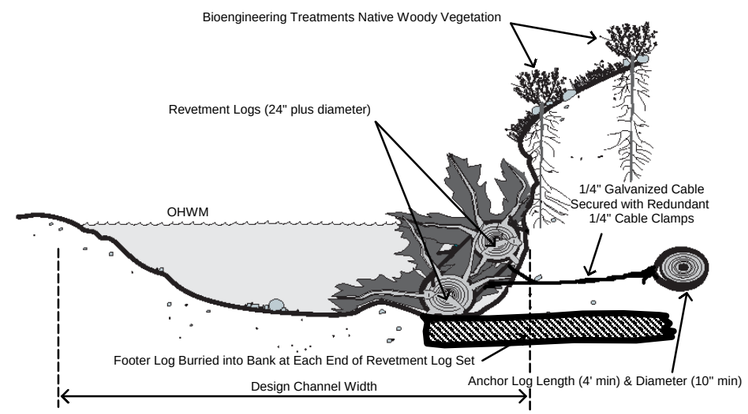

TYPE 2 PLAN VIEW

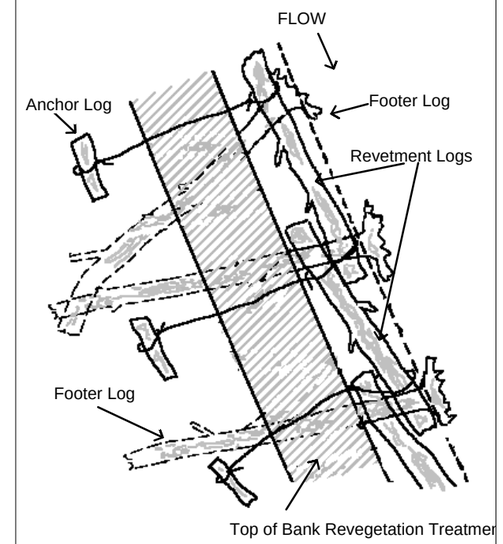

TYPE 1 SECTION VIEW

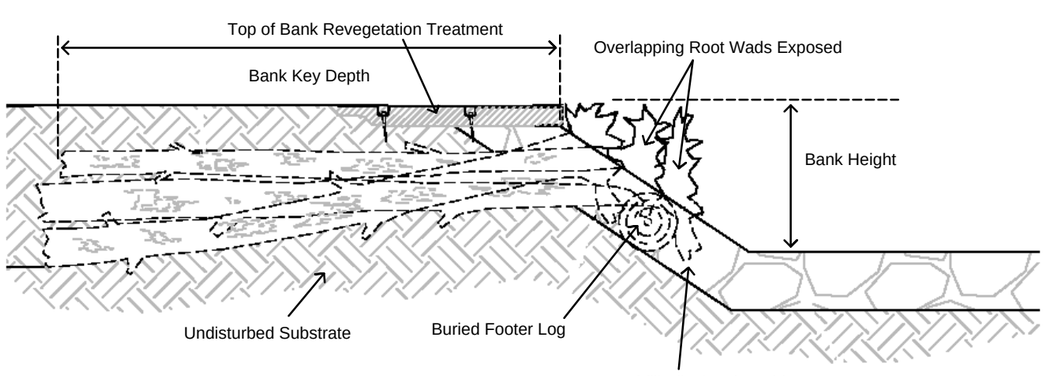

Work Description:

Root wad revetment installation includes the preparatory work and operations necessary to install complete structures at locations listed on sheets SP-2 through SP-5. All materials for root wad revetments are identified and shall meet the specifications listed on sheet DT-4.
Design consultant shall survey and mark the construction location for each root wad revetment structure prior to construction.
Groundwater dewatering may be required for structure installation. Dewatering discharge, if necessary, shall be directed to a settling basin approved by the design consultant. Contractor shall install BMPs as approved by design consultant.

Contractor shall use boulders and logs with specified dimensions as shown on sheet DT-4. Contractor shall excavate trench for structure and stockpile excavated alluvium for backfill.
Contractor shall install the footer logs as per specifications on sheet DT-4.

Contractor shall install the rootwad revetment logs as per orientation described on sheet DT-4.
The most upstream root wad (Type 1) shall not protrude into the channel and shall be flush with the bank line. Root wads shall not extend above the bankfull elevation. Contractor shall backfill up to the top of the root wad logs with stockpiled alluvium, and then compact with bucket compaction. If deflector logs are utilized, they shall be oriented at a downstream angle. Exposed ends shall not be sawed.
Design consultant shall inspect materials and final elevations of structures prior to contractor commencing construction of final channel grading and backfill.

Treatment Type 1	Specification
Rootwad Stem Length	~20 ft
Bank Key Length	15 ft
Root Wad Fan Diameter	2 ft min.
Footer Log Length	30 ft
Footer Log Diameter	18 in min.
Ballast Rock Diameter	2 ft min.
Treatment Type 2	
Revetment Log Diameter	2 ft min.
Revetment Log Length	30 ft
Anchor Log Diameter	10 in min.
Anchor Log Length	4 ft min.
Footer Log Length	20 ft
Footer Log Diameter	18 in min.
Cable	3/16" galvanized

research & consulting inc.
Biota
PO Box 8578, 140 E. Broadway, Suite 23
Jackson, WY 83002
ph: 307-733-4216

DETAIL SHEET -- ROOT WAD & LOG REVETMENT

Badger Creek Stabilization Project
Badger Creek Road (W 10000 N)
Teton County, Idaho

No: 1
Date: 7/9/12
Description: Design Drawings

Drawing:

DT-4

Appendix 2
Existing and Proposed Condition Sections
Badger Creek Stabilization Project
Badger Creek Road (W 10000 N), Teton County, Idaho

Cross Section 3 (Existing and Proposed Conditions)

Existing Condition		Proposed Condition	
Station (ft)	Elevation (ft)	Station (ft)	Elevation (ft)
0.0	6194.7660	20.0	6194.1750
4.0	6193.4970	24.1	6194.2
13.0	6194.6940	26.6	6193.9
20.0	6194.1750	28.6	6193.6
29.5	6194.2490	29.7	6193.3
42.9	6195.1190	30.9	6193.0
48.1	6194.8930	34.0	6191.7
51.2	6194.4320	37.2	6190.4
56.0	6193.4610	39.5	6189.7
61.5	6192.3250	50.6	6189.1
65.4	6191.9770	61.8	6189.7
69.1	6191.6230	64.0	6190.4
73.4	6191.4610	67.2	6191.7
75.6	6191.6080	70.3	6193.0
76.7	6191.1850	71.5	6193.3
77.1	6194.1680	72.7	6193.6
87.1	6194.2100	74.7	6193.9
		77.1	6194.1680

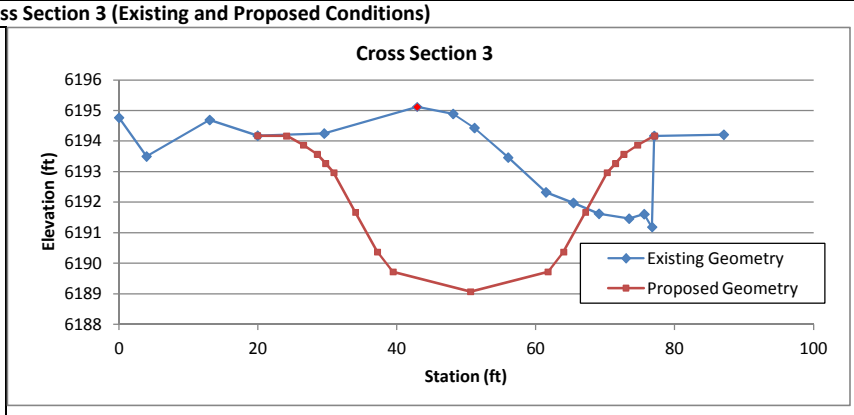

Cross Section 5 (Existing and Proposed Conditions)

Existing Condition		Proposed Condition	
Station (ft)	Elevation (ft)	Station (ft)	Elevation (ft)
0.0	6193.5	10.0	6193.5
10.0	6193.5	12.4	6193.2
10.8	6191.2	14.4	6192.9
14.6	6191.0	15.6	6192.6
18.8	6191.4	16.8	6192.3
22.8	6191.6	19.9	6192.0
28.6	6192.0	23.1	6191.7
36.2	6192.4	25.3	6191.6
40.4	6192.6	36.5	6191.4
46.8	6193.2	47.7	6191.6
58.2	6194.0	49.9	6191.7
68.2	6194.0	53.1	6192.0
		56.2	6192.3
		57.4	6192.6
		58.6	6192.9
		60.6	6193.2
		63.0	6193.5
		68.2	6194.0

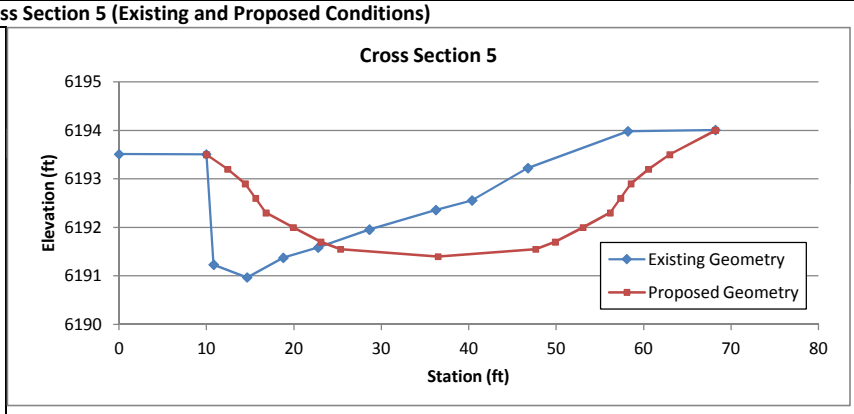

Cross Section 6 (Existing and Proposed Conditions)

Existing Condition		Proposed Condition	
Station (ft)	Elevation (ft)	Station (ft)	Elevation (ft)
0.0	6193.0	10.0	6193.0
10.0	6193.0	12.4	6192.7
13.2	6191.3	14.4	6192.4
17.5	6192.1	15.6	6192.1
21.8	6192.0	16.8	6191.8
28.4	6191.3	19.9	6191.5
31.9	6191.1	23.1	6191.2
37.8	6190.8	25.3	6191.0
42.0	6190.8	36.5	6190.9
45.7	6190.6	47.7	6191.0
48.9	6190.6	49.9	6191.2
52.6	6191.4	53.1	6191.5
54.8	6191.6	56.2	6191.8
56.2	6191.9	57.4	6192.1
58.3	6193.3	58.6	6192.4
60.4	6193.3	60.6	6192.7
65.0	6193.3	63.0	6193.0
		65.0	6193.3

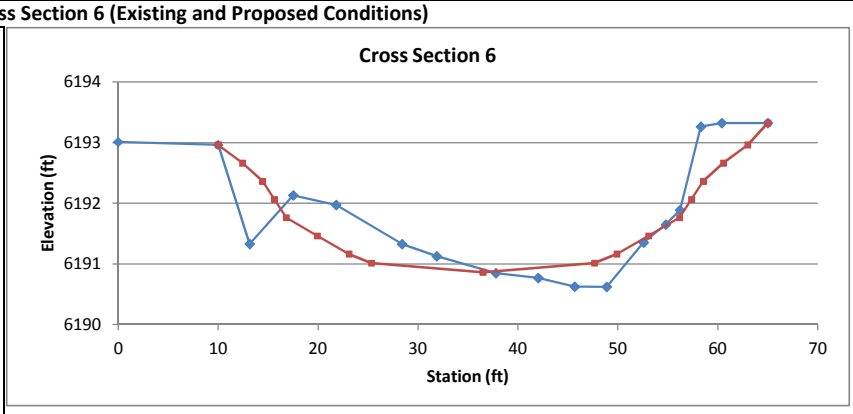

Cross Section 7 (Existing and Proposed Conditions)
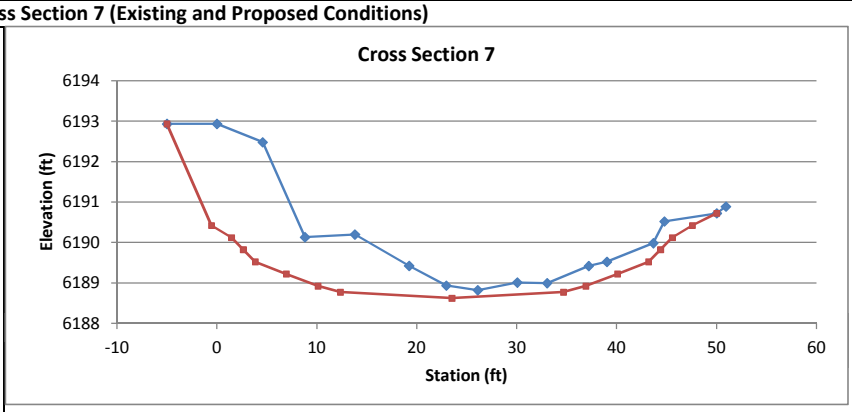
Existing Condition		Proposed Condition	
Station (ft)	Elevation (ft)	Station (ft)	Elevation (ft)
-5.0	6192.9	-5.0	6192.9
0.0	6192.9	-0.5	6190.4
4.6	6192.5	1.5	6190.1
8.8	6190.1	2.6	6189.8
13.8	6190.2	3.8	6189.5
19.2	6189.4	6.9	6189.2
22.9	6188.9	10.1	6188.9
26.1	6188.8	12.4	6188.8
30.0	6189.0	23.5	6188.6
33.0	6189.0	34.7	6188.8
37.2	6189.4	36.9	6188.9
39.0	6189.5	40.1	6189.2
43.7	6190.0	43.2	6189.5
44.8	6190.5	44.4	6189.8
50.0	6190.7	45.6	6190.1
50.9	6190.9	47.6	6190.4
		50.0	6190.7